ITEM	CD
1651	J03
1654	G06
1657	K09
1658	K09
1660	K08
2651	C01
2652	E01
2653	C03
2655	C03
2655	F01
2656	F02
2657	E01
2658	F03
2661	B04
2662	B05
2664	A06
2665	C06
2666	A07
2670	A09
2670	A09
2671	B09
2673	C09
2675	C12
2677	B13
2679	I02
2680	K03
2681	I01
2683	I03
2688	G06
2691	F13
2692	F13
2695	D15
2696	E16
3651	C02
3652	C01
3653	C02
3654	C02
3656	D01
3657	D01
3658	E01
3660	E01
3661	E01
3662	F02
3664	B05
3666	C06
3669	B07
3670	B07
3671	C07
3673	B08
3675	B08
3677	C08
3679	B09
3680	C09
3682	B11
3683	A13
3684	C12
3685	C13
3686	B13
3687	B13
3688	B14
3690	B15
3691	B15
3692	A13
3693	A14
3695	J03
3696	J08
3697	J07
3698	J08
3699	J07
3701	D06
3702	E08
3703	E09
3705	F06
3706	G06
3707	D14
3708	F14
3709	F13
3710	E14
3711	E14
3712	D12
5651	F03
6552	J01
6552	H02
6651	B03
6654	H05
6655	B14
6657	E06
6658	D08
6660	H10
6660	F07
6661	F10
6662	F10
6663	E11
6663	H09
6664	E13
6665	E16
6666	F12
6666	H12
6667	K11
6668	K13
6680	B08
6681	B08
6685	J09
6686	J08
6687	F14
6688	F15
6690	F02
6694	B10
6695	B10
6696	C11
6698	B12
6699	B12
6700	A12
6701	B12
6705	I03
6707	J06
6708	K08
6709	K07

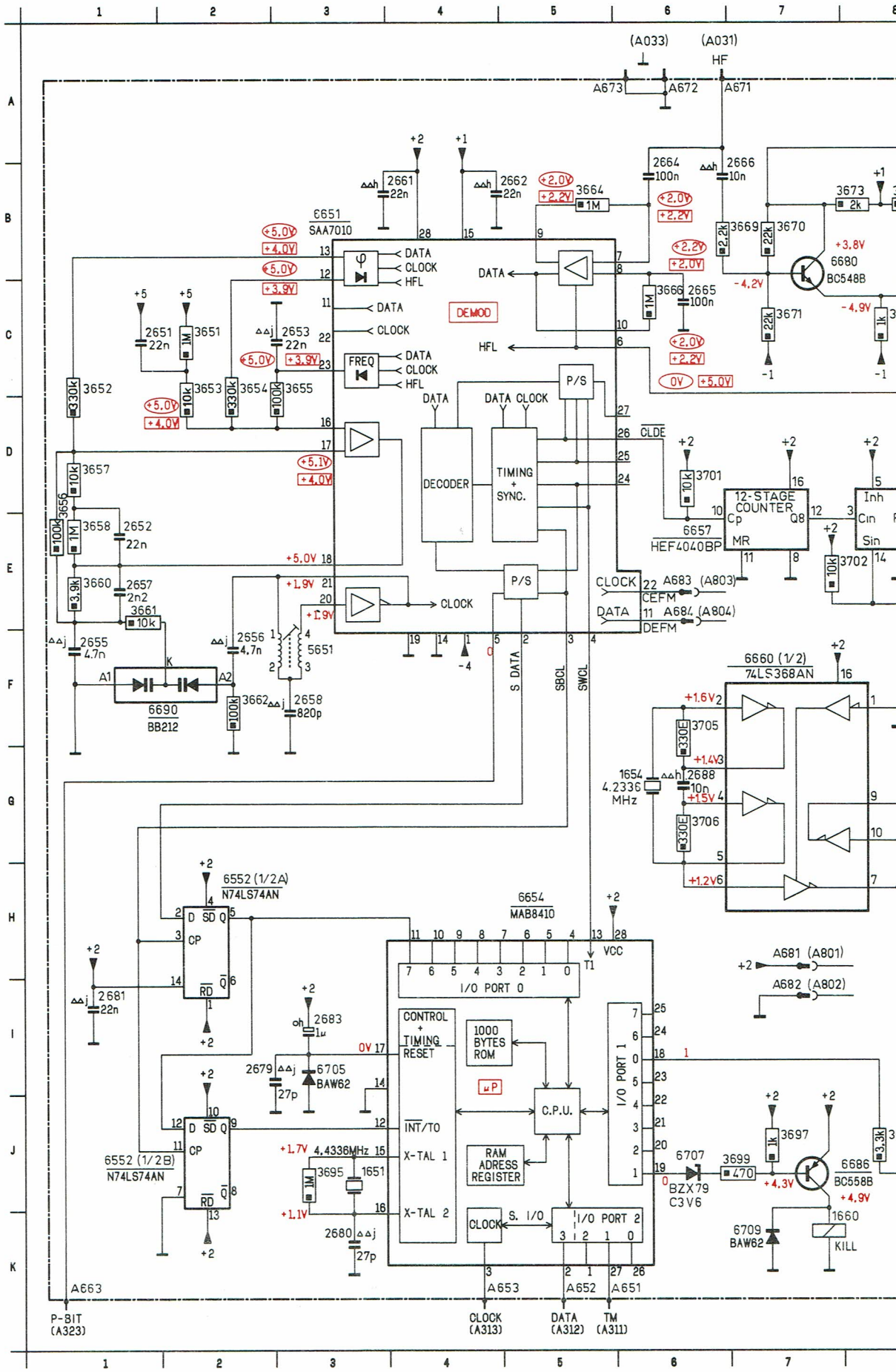

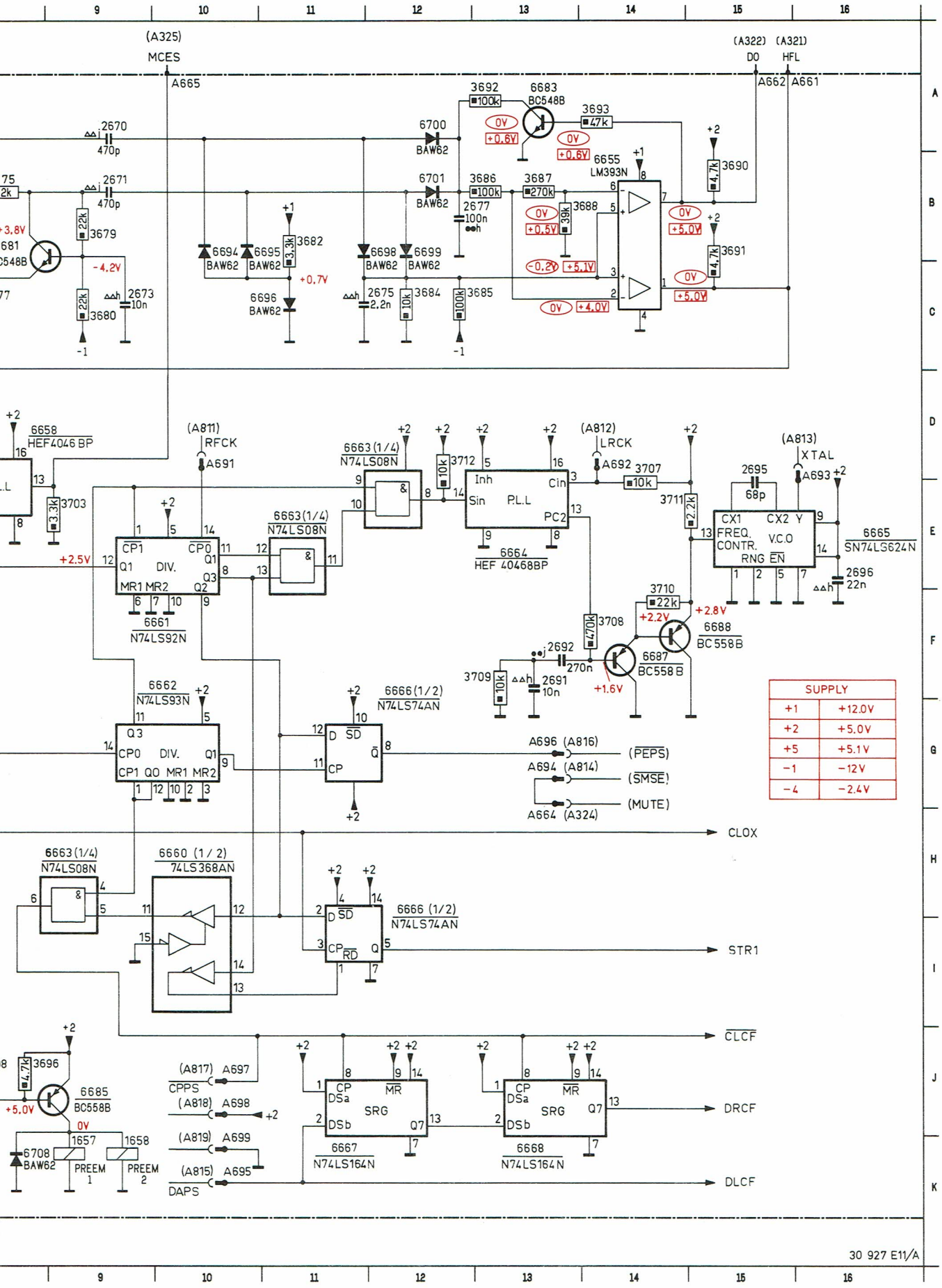
(A325)
MCES
A665
(A322) (A321)
D0 HFL
A662 A661
3692 100k
6683 BC548B
3693 47k
6700 BAW62
2670 470p
2671 470p
6701 BAW62
3686 100k
3687 270k
6655 LM393N
3690 4,7k
3691 4,7k
3688 39k
2677 100n
3679 22k
3680 22k
2673 10n
6694 BAW62
6695 BAW62
3682 3,3k
6696 BAW62
6698 BAW62
6699 BAW62
2675 2,2n
3684 10k
3685 100k
6658 HEF4046 BP
3703 3,3k
(A811) RFCK
A691
6663(1/4) N74LS08N
3712 10k
(A812) LRCK
A692
3707 10k
(A813) XTAL
A693
2695 68p
6665 SN74LS624N
2696 22n
6661 N74LS92N
6664 HEF 40468BP
3711 2,2k
3710 22k
3708 470k
6688 BC558B
6687 BC558B
2692 270n
3709 10k
2691 10n
6662 N74LS93N
6666(1/2) N74LS74AN
A696 (A816) (PEPS)
A694 (A814) (SMSE)
A664 (A324) (MUTE)
CLOX
6660 (1/2) 74LS368AN
STR1
CLCF
3696 4,7k
6685 BC558B
6708 BAW62
1657 PREEM 1
1658 PREEM 2
(A817) A697 CPPS
(A818) A698
(A819) A699
(A815) A695 DAPS
6667 N74LS164N
6668 N74LS164N
DRCF
DLCF
SUPPLY
+1 +12.0V
+2 +5.0V
+5 +5.1V
−1 −12V
−4 −2.4V
30 927 E11/A

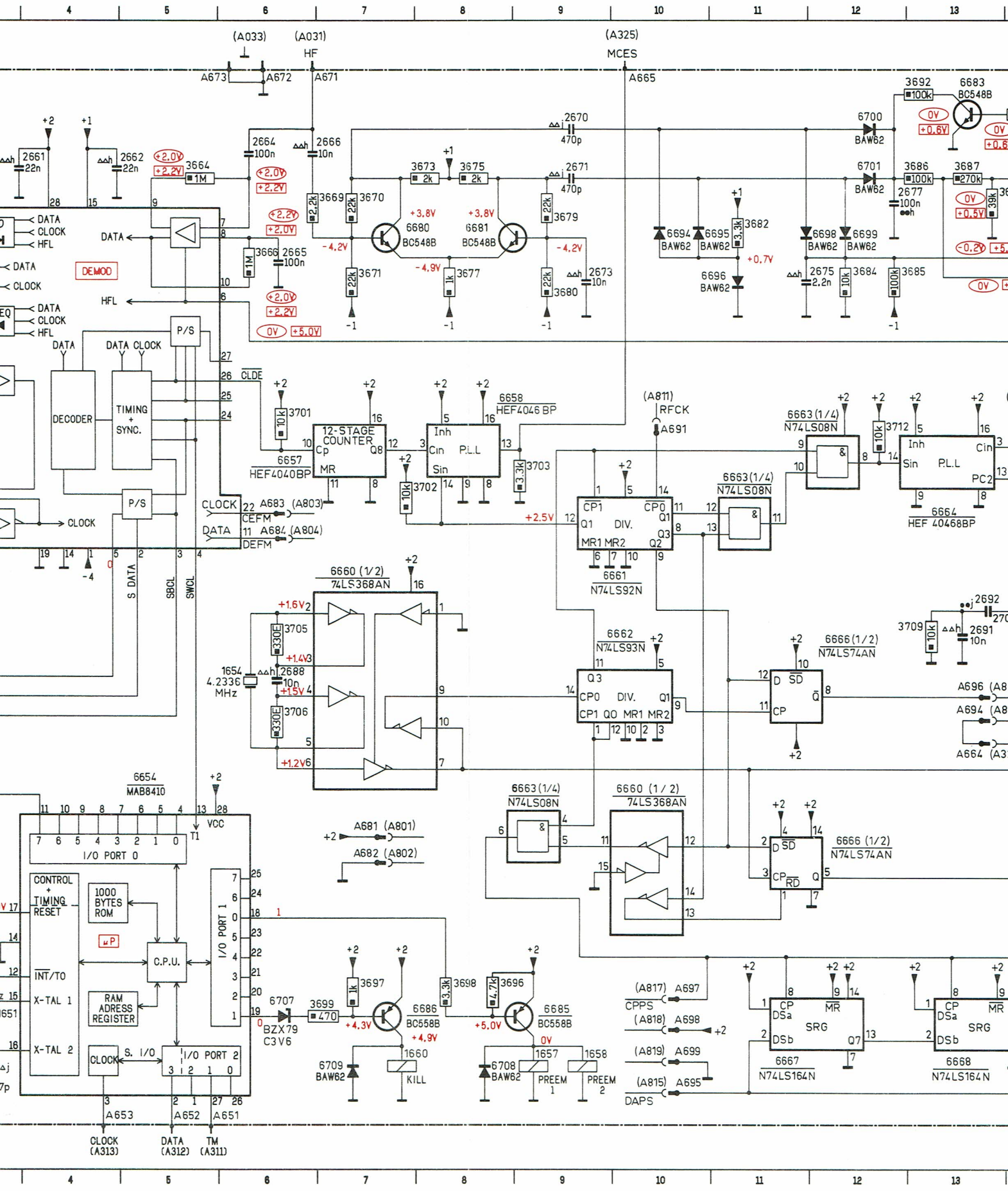
(A033)
(A031)
HF
(A325)
MCES
A673
A672
A671
A665
DEMOD
DATA
CLOCK
HFL
P/S
DECODER
TIMING + SYNC.
CLDE
12-STAGE COUNTER
6657
HEF4040BP
6658
HEF4046 BP
P.L.L
(A811)
RFCK
A691
6663 (1/4)
N74LS08N
6664
HEF 40468BP
6661
N74LS92N
6660 (1/2)
74LS368AN
6662
N74LS93N
6666 (1/2)
N74LS74AN
6654
MAB8410
I/O PORT 0
CONTROL + TIMING
RESET
INT/TO
X-TAL 1
X-TAL 2
1000 BYTES ROM
C.P.U.
RAM ADRESS REGISTER
I/O PORT 1
I/O PORT 2
S. I/O
VCC
A681 (A801)
A682 (A802)
A683 (A803)
A684 (A804)
CEFM
DEFM
S DATA
SBCL
SWCL
4.2336 MHz
BZX79 C3V6
BC558B
KILL
PREEM 1
PREEM 2
(A817) A697
CPPS
(A818) A698
(A819) A699
(A815) A695
DAPS
6667
N74LS164N
6668
N74LS164N
SRG
A653
A652
A651
CLOCK (A313)
DATA (A312)
TM (A311)

J06
K08
K07

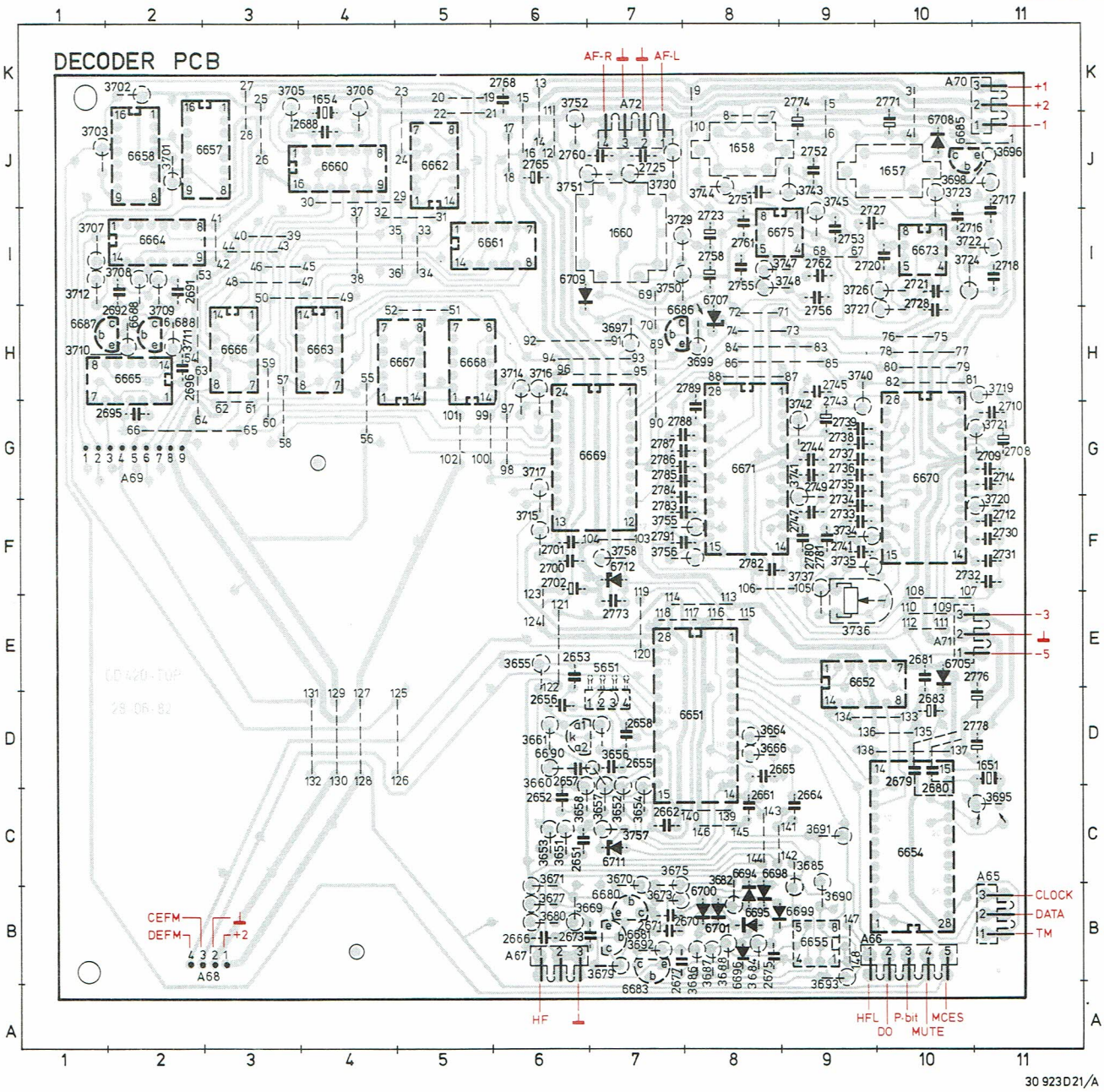

See page 8–21

WIRING VIA FLEX CABLES
FROM DECODER PCB TO: ....

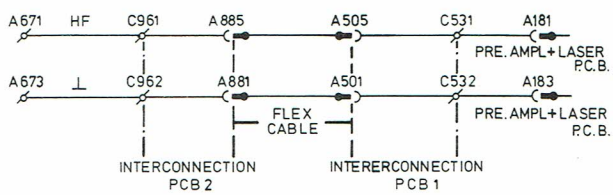

31725 A 13

HEF4040BP		5322 209 14269
HEF4046BP		5322 209 14126
LM393N		4822 209 80797
MAB8410		4822 209 81454
N74LS08N		5322 209 84995
N74LS74AN		4822 209 80782
N74LS92N		5322 209 85973
N74LS93N		5322 209 84998
N74LS164N		5322 209 85002
SAA7010 (DEMOD)		4822 209 10376
SN74LS368AN		4822 209 81433
SN74LS624N		4822 209 81476

BC548B		4822 130 40937
BC558B		4822 130 44197

BAW62		4822 130 30613
BB212		4822 130 31129
BZX79-C3V6		5322 130 34834

1651	4.4336 MHz	4822 242 70323
1654	4.2336 MHz	4822 242 70643

1657,1658		4822 280 20114
1660		4822 280 20115
5651		4822 156 21155
3651,3658, 3664,3666 3695	1 M SFR25	4822 110 73187
2651 2692	270n - 10%	4822 121 41679
2664,2665, 2677	100n - 10%	4822 121 41678
2695	68p - 2%	4822 122 31469

IC

24p		4822 255 40159
28p		4822 255 40156

ITEM	PCB
1651	D11
1654	K04
1657	J10
1658	J08
1660	I07
2651	C06
2652	C06
2653	E06
2655	D07
2656	D06
2657	C06
2658	D07
2661	C08
2662	C07
2664	C09
2665	D08
2666	B06
2670	B08
2671	B07
2673	B06
2675	B08
2677	A07
2679	C10
2680	C10
2681	E10
2683	D10
2688	J04
2691	H02
2692	H02
2695	G02
2696	H02
2700	F06
2701	F06
2702	F06
2708	G11
2709	G11
2710	G11
2712	F11
2714	G11
2716	I11
2717	J11
2718	I11
2720	I09
2721	I10
2723	I08
2725	J07
2727	I10
2728	H10
2730	F11
2731	F11
2732	F11
2733	F09
2734	F09
2735	G09
2736	G09
2737	G09
2738	G09
2739	G09
2741	F09
2743	G09
2744	G09
2745	H09
2747	F09
2749	G09
2751	J08
2752	J09
2753	I09
2755	I08
2756	H09
2758	I08
2760	J06
2761	I08
2762	I09
2765	J06
2768	K06
2771	K10
2773	E07
2774	K09
2776	E11
2778	D11
2780	F09
2781	F09
2782	F08
2783	F07
2784	G07
2785	G07
2786	G07
2787	G07
2788	G07
2789	H08
2791	F07
3651	C06
3652	C07
3653	C06
3654	C07
3655	E06
3656	D07
3657	C07
3658	C06
3660	D06
3661	D06
3662	D07
3664	D08
3666	D08
3669	B06
3670	C07
3671	C06
3673	B07
3675	C07
3677	B06
3679	B07
3680	B06
3682	C08
3684	B08
3685	C09
3686	A08
3687	B08
3688	B08
3690	B09
3691	C09
3692	B07
3693	A09
3695	C11
3696	J11
3697	H07
3698	J11
3699	H08
3701	J02
3702	K02
3703	J01
3705	K03
3706	K04
3707	I01
3708	I02
3709	H02
3710	H02
3711	H02
3712	I01
3714	H06
3715	F06
3716	H06
3717	G06
3719	G11
3720	F11
3721	G11
3722	I11
3723	J10
3724	I11
3726	I09
3727	H09
3729	I07
3730	J07
3731	J08
3734	F09
3735	F09
3736	E09
3737	F09
3740	H09
3741	G09
3742	G09
3743	J09
3744	J08
3745	J09
3747	I09
3748	I09
3750	I07
3751	J06
3752	K06
3755	F07
3756	F07
3757	C07
3758	F07
5651	E07
6651	D08
6652	E09
6654	C10
6655	B09
6657	J03
6658	J02
6660	J04
6661	I05
6662	J05
6663	H04
6664	I02
6665	H02
6666	H03
6667	H05
6668	H05
6669	G07
6670	G10
6671	G08
6673	I10
6675	I09
6680	B07
6681	B07
6683	A07
6685	J11
6686	H07
6687	H01
6688	H02
6690	D06
6694	C08
6695	B08
6696	B08
6698	C08
6699	B09
6700	B08
6701	B08
6705	E10
6707	I08
6708	J10
6709	I06
6711	C07
6712	F07

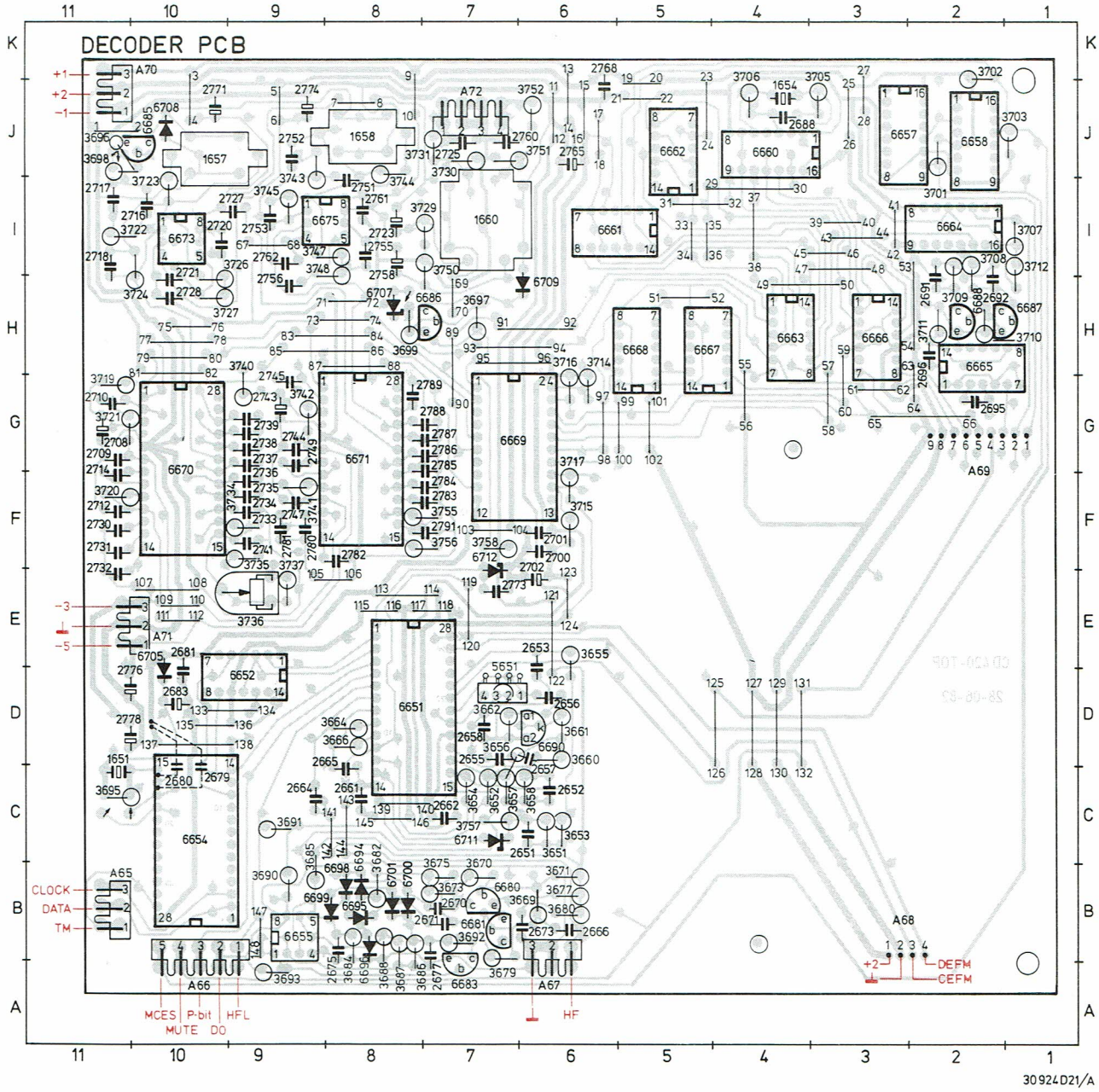

See page 8–21

WIRING VIA FLEX CABLES
FROM DECODER PCB TO: ....

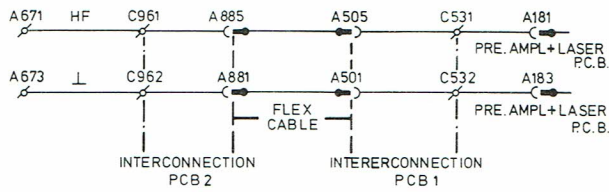

31725 A 13

NE5532N		5322 209 86234
N74LS08N		5322 209 84995
SAA7030 (FIL)		4822 209 10378
TDA1540D (DAC)		4822 209 81453

BZX79-C2V4		4822 130 31253
BZX79-B5V1		4822 130 34233

3736	220E	5322 101 14009

3723,3744	1M	SFR25	4822 110 73187
3724,3745	1k8	MR25	4822 116 51242

2732,2733, 2734,2782, 2783,2784	100n - 10%	4822 121 41678
2716,2751	5n1 - 2%	5322 121 54148
2718,2720, 2753,2755	2n2 - 2%	4822 121 50415
2721,2756	1n2 - 2%	5322 121 54163
2730,2731, 2780,2781	270n - 10%	4822 121 41679

ITEM	PCB
1651	D11
1654	J04
1657	J10
1658	J08
1660	I07
2651	C06
2652	C06
2653	E06
2655	D07
2656	D06
2657	C06
2658	D07
2661	C08
2662	C07
2664	C09
2665	D09
2666	B06
2670	B07
2671	B07
2673	B06
2675	A08
2677	A07
2679	C10
2680	C10
2681	E10
2683	D10
2688	J04
2691	H02
2692	H02
2695	G02
2696	G02
2700	F06
2701	F06
2702	E06
2708	G11
2709	G11
2710	G11
2712	F11
2714	G11
2716	I10
2717	I11
2718	I11
2720	I10
2721	I10
2723	I08
2725	J07
2727	I09
2728	H10
2730	F11
2731	F11
2732	F11
2733	F09
2734	F09
2735	F09
2736	F09
2737	G09
2738	G09
2739	G09
2741	F09
2743	G09
2744	G09
2745	G09
2747	F09
2749	G09
2751	I08
2752	J09
2753	I09
2755	I08
2756	H09
2758	H08
2760	J06
2761	I08
2762	I09
2765	J06
2768	K06
2771	J10
2773	E07
2774	J09
2776	D11
2778	D11
2780	F09
2781	F09
2782	F08
2783	F07
2784	F07
2785	G07
2786	G07
2787	G07
2788	G07
2789	G07
2791	F07
3651	C06
3652	C07
3653	C06
3654	C07
3655	E06
3656	D07
3657	C07
3658	C06
3660	D06
3661	D06
3662	D07
3664	D08
3666	D08
3669	B06
3670	B07
3671	B06
3673	B07
3675	B07
3677	B06
3679	A07
3680	B06
3682	C08
3684	B08
3685	C09
3686	A08
3687	A08
3688	A08
3690	B09
3691	C09
3692	B07
3693	A09
3695	C11
3696	J11
3697	H07
3698	J11
3699	H08
3701	I02
3702	K02
3703	J01
3705	J03
3706	J04
3707	I01
3708	I02
3709	H02
3710	H02
3711	H02
3712	I01
3714	H06
3715	F06
3716	H06
3717	G06
3719	G11
3720	F11
3721	G11
3722	I10
3723	I10
3724	H10
3726	I09
3727	H10
3729	I07
3730	J07
3731	J08
3734	F10
3735	F09
3736	E09
3737	F09
3740	H09
3741	F09
3742	G09
3743	I09
3744	I08
3745	I09
3747	I09
3748	I09
3750	I07
3751	J06
3752	J06
3755	F07
3756	F07
3757	C07
3758	F07
5651	D07
6651	D08
6652	D09
6654	C10
6655	B09
6657	J03
6658	J02
6660	J04
6661	I06
6662	J05
6663	H04
6664	I02
6665	H02
6666	H03
6667	H05
6668	H05
6669	G07
6670	G10
6671	G08
6673	I10
6675	I09
6680	B07
6681	B07
6683	A07
6685	J11
6686	H07
6687	H01
6688	H02
6690	D06
6694	C08
6695	B08
6696	A08
6698	B08
6699	B09
6700	B08
6701	B08
6705	E10
6707	H08
6708	J10
6709	H06
6711	C07
6712	F07

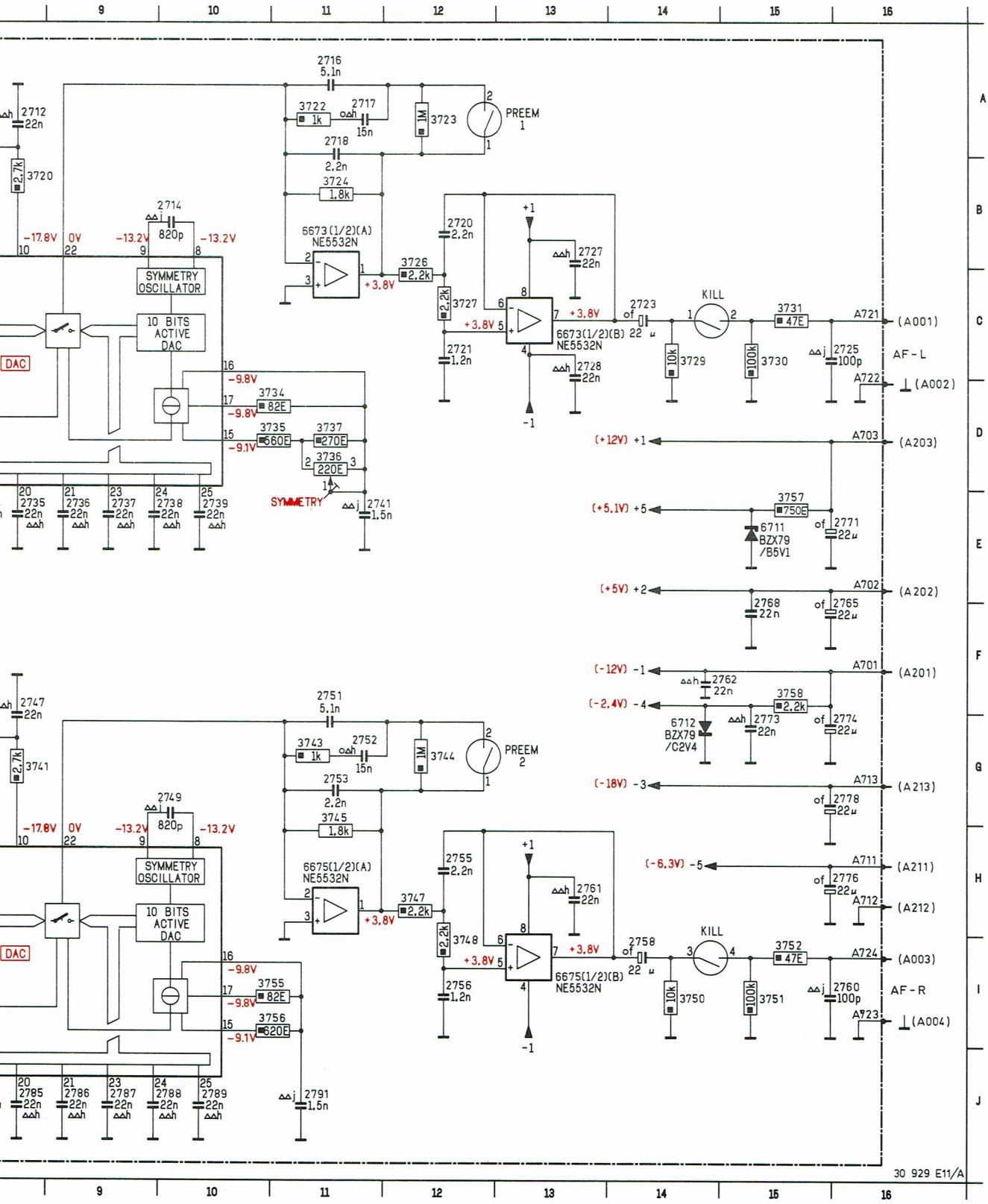
2716
5.1n
2712
22n
3722
1k
2717
15n
1M
3723
PREEM
1
2718
2.2n
3720
2.7k
3724
1.8k
2714
820p
-17.8V
0V
-13.2V
-13.2V
6673(1/2)(A)
NE5532N
3726
2.2k
+3.8V
SYMMETRY
OSCILLATOR
10 BITS
ACTIVE
DAC
DAC
2720
2.2n
+1
2727
22n
3727
2.2k
+3.8V
+3.8V
6673(1/2)(B)
NE5532N
2723
22 µ
KILL
3731
47E
A721
(A001)
AF-L
2721
1.2n
2728
22n
10k
3729
100k
3730
2725
100p
A722
(A002)
-1
-9.8V
3734
82E
-9.8V
3735
560E
-9.1V
3737
270E
3736
220E
SYMMETRY
2741
1.5n
(+12V) +1
A703
(A203)
(+5.1V) +5
3757
750E
6711
BZX79
/B5V1
2771
22µ
(+5V) +2
A702
(A202)
2768
22n
2765
22µ
(-12V) -1
A701
(A201)
2762
22n
(-2.4V) -4
3758
2.2k
6712
BZX79
/C2V4
2773
22n
2774
22µ
(-18V) -3
A713
(A213)
2778
22µ
(-6.3V) -5
A711
(A211)
2776
22µ
A712
(A212)
2747
22n
2751
5.1n
3743
1k
2752
15n
1M
3744
PREEM
2
2753
2.2n
3741
2.7k
3745
1.8k
2749
820p
6675(1/2)(A)
NE5532N
3747
2.2k
2755
2.2n
2761
22n
3748
2.2k
+3.8V
+3.8V
6675(1/2)(B)
NE5532N
2758
22 µ
KILL
3752
47E
A724
(A003)
AF-R
2756
1.2n
10k
3750
100k
3751
2760
100p
A723
(A004)
-1
-9.8V
3755
82E
-9.8V
3756
620E
-9.1V
2791
1.5n
30 929 E11/A

ITEM	CD
2700	C05
2701	C05
2702	C04
2709	A07
2710	B07
2712	A08
2714	B10
2717	A11
2718	A11
2720	B12
2720	B08
2721	C12
2723	C14
2725	C16
2727	B13
2728	C13
2730	E06
2731	E07
2732	E07
2733	E08
2734	E08
2735	E08
2736	E09
2737	E09
2738	E10
2739	E10
2741	E11
2743	G11
2743	G06
2744	F07
2745	G07
2747	F08
2749	G10
2751	F11
2752	G11
2753	G11
2755	H12
2756	I12
2758	I14
2760	I16
2761	H13
2762	F15
2765	F16
2768	F15
2771	E16
2773	G15
2774	G16
2776	H16
2778	G16
2780	J06
2781	J07
2782	J07
2783	J08
2784	J08
2785	J08
2786	J09
2787	J09
2788	J10
2789	J10
2791	J11
3714	C02
3715	C02
3716	C03
3717	C04
3719	B07
3721	B07
3722	A11
3723	A12
3724	B11
3726	B12
3727	C12
3729	C14
3730	C15
3731	C15
3734	D10
3735	D10
3736	D11
3737	D11
3740	G07
3741	G08
3742	G07
3744	G12
3745	G11
3747	H12
3748	I12
3750	I14
3751	I15
3752	I15
3755	I10
3756	I10
3757	E15
3758	F15
6663	I03
6669	D04
6670	C06
6671	H06
6673	C13
6673	B11
6675	H11
6675	I13
6708	B06
6711	E15
6712	G14
6716	A11

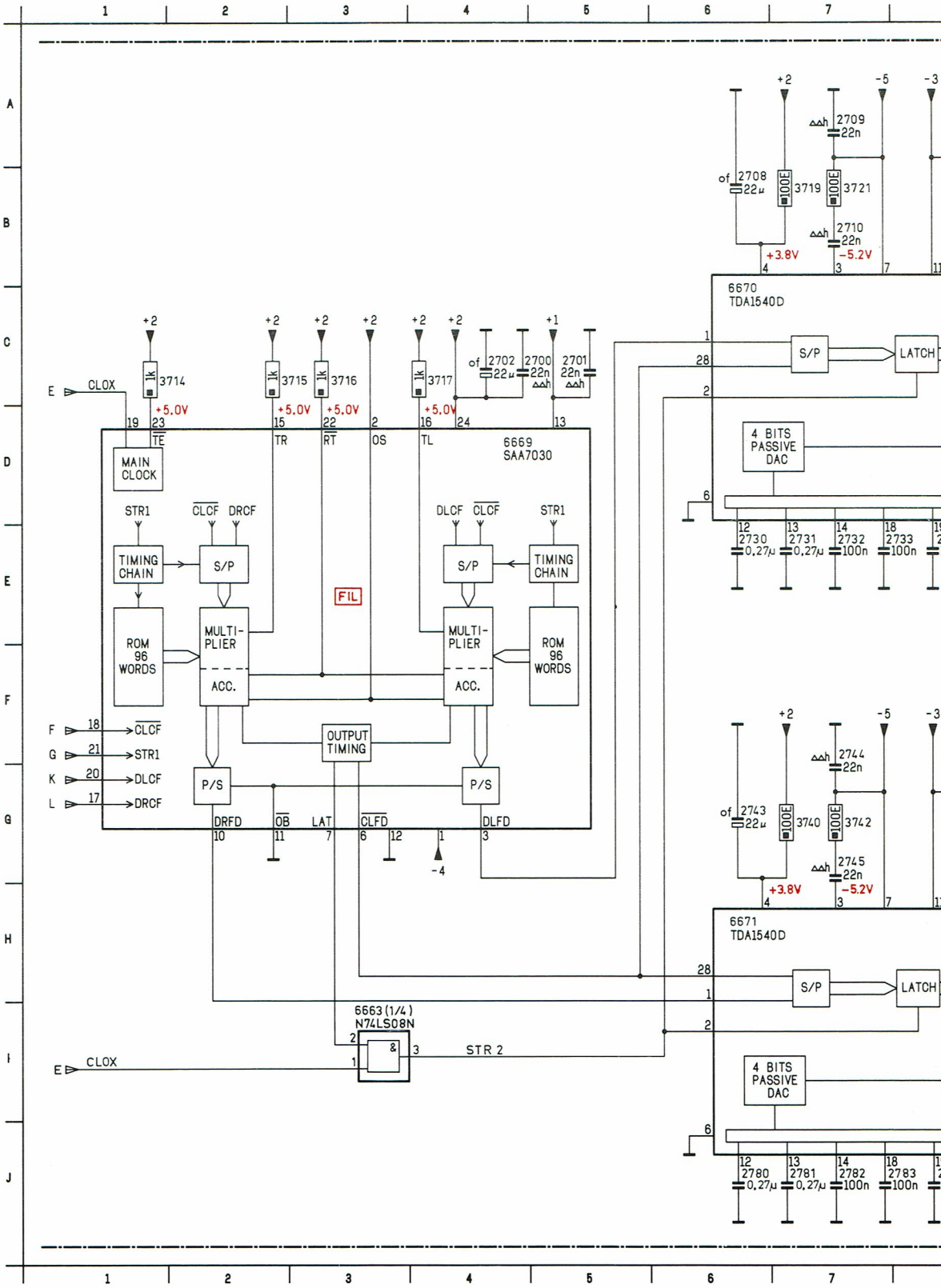

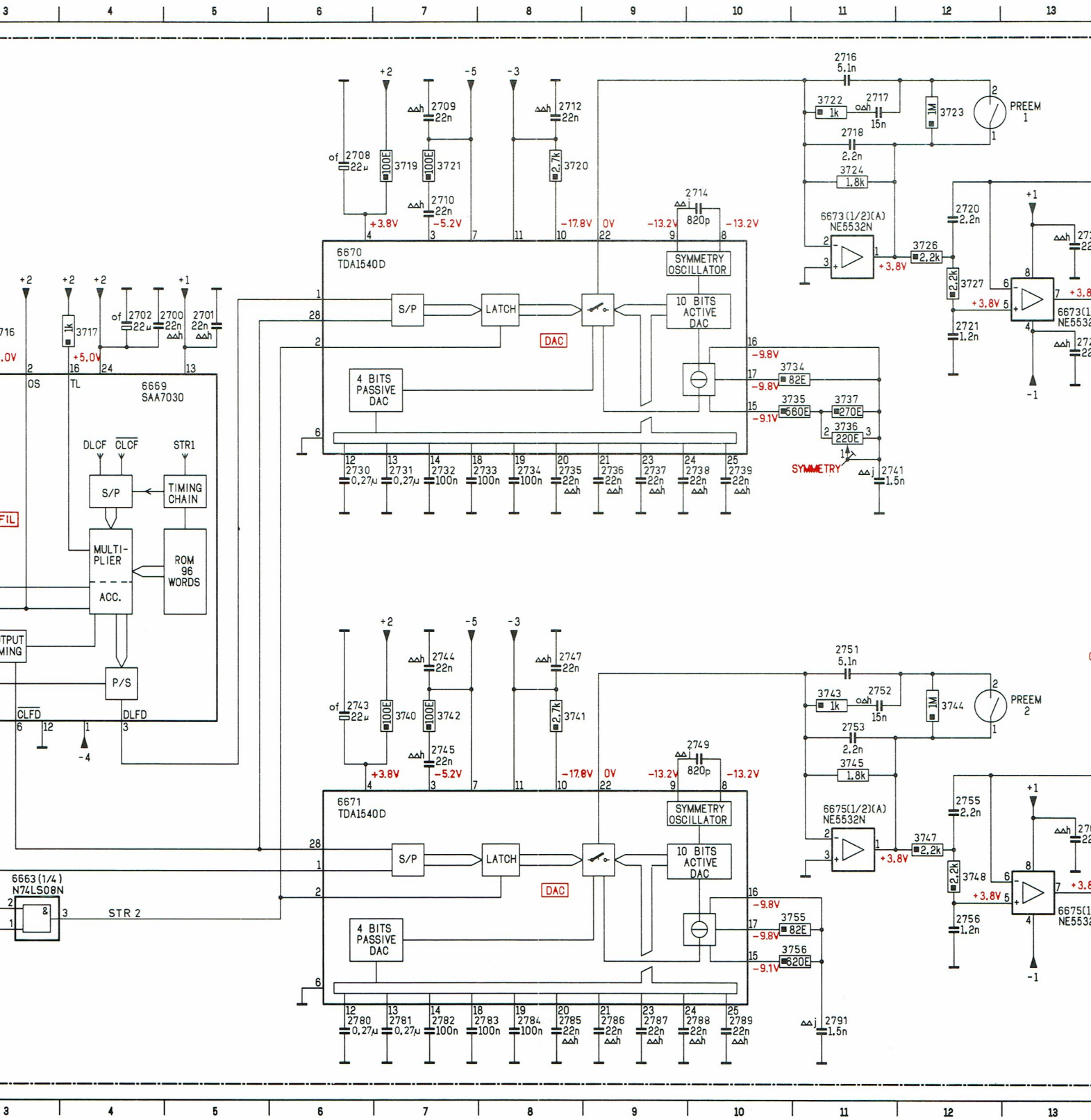
6669
SAA7030
S/P
TIMING CHAIN
MULTI-PLIER
ROM 96 WORDS
ACC.
P/S
DLCF
CLCF
STR1
OS
TL
CLFD
DLFD
6663(1/4)
N74LS08N
STR 2
6670
TDA1540D
S/P
LATCH
DAC
4 BITS PASSIVE DAC
10 BITS ACTIVE DAC
SYMMETRY OSCILLATOR
SYMMETRY
6673(1/2)(A)
NE5532N
PREEM 1
6671
TDA1540D
6675(1/2)(A)
NE5532N
PREEM 2

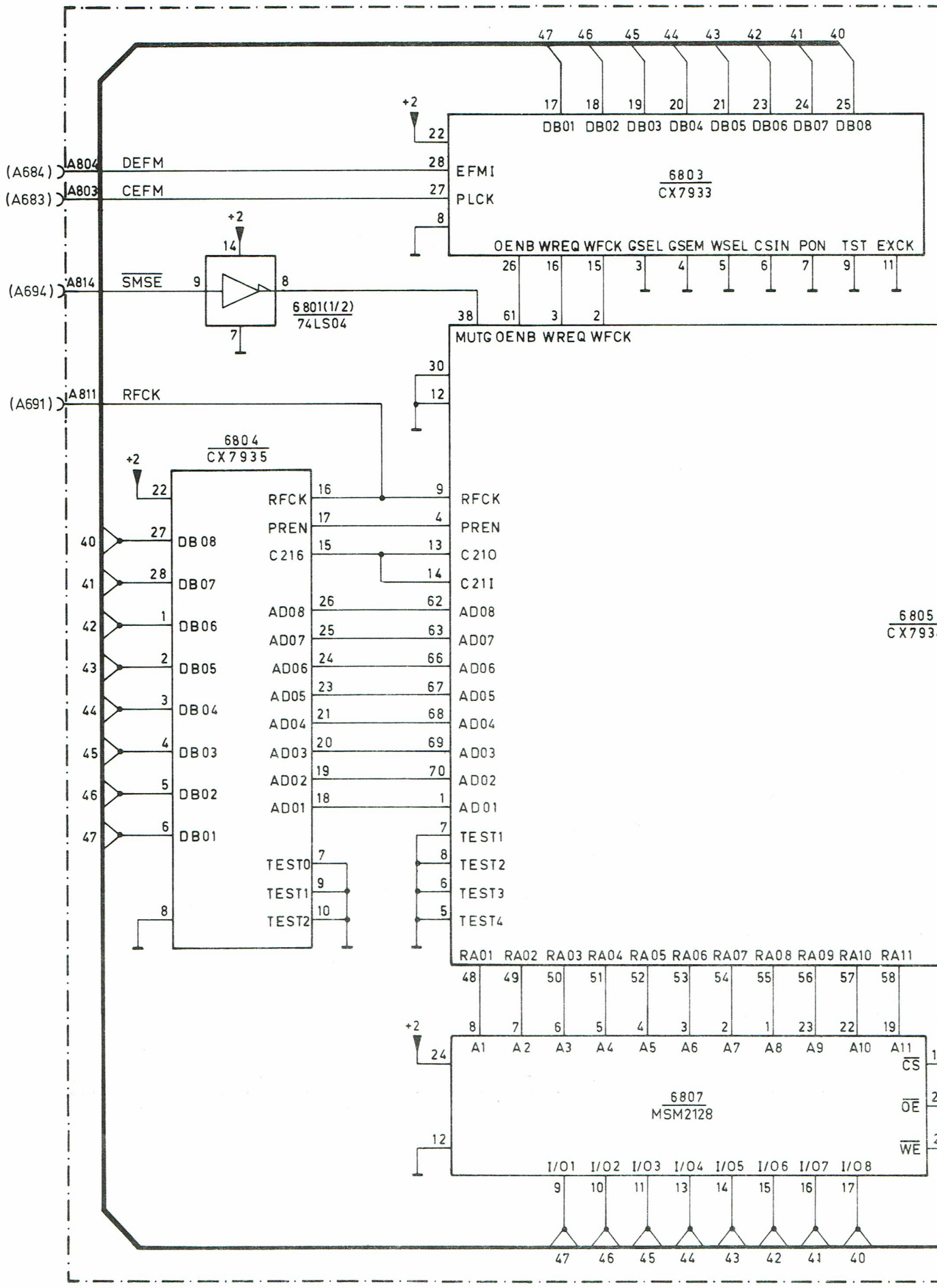
6803
CX7933
DB01 DB02 DB03 DB04 DB05 DB06 DB07 DB08
EFMI
PLCK
OENB WREQ WFCK GSEL GSEM WSEL CSIN PON TST EXCK
(A684) A804 DEFM
(A683) A803 CEFM
(A694) A814 SMSE
6801(1/2)
74LS04
(A691) A811 RFCK
MUTG OENB WREQ WFCK
6804
CX7935
RFCK
PREN
C216
DB08
DB07
DB06
DB05
DB04
DB03
DB02
DB01
AD08
AD07
AD06
AD05
AD04
AD03
AD02
AD01
TEST0
TEST1
TEST2
C210
C211
TEST3
TEST4
RA01 RA02 RA03 RA04 RA05 RA06 RA07 RA08 RA09 RA10 RA11
6807
MSM2128
A1 A2 A3 A4 A5 A6 A7 A8 A9 A10 A11
CS
OE
WE
I/01 I/02 I/03 I/04 I/05 I/06 I/07 I/08

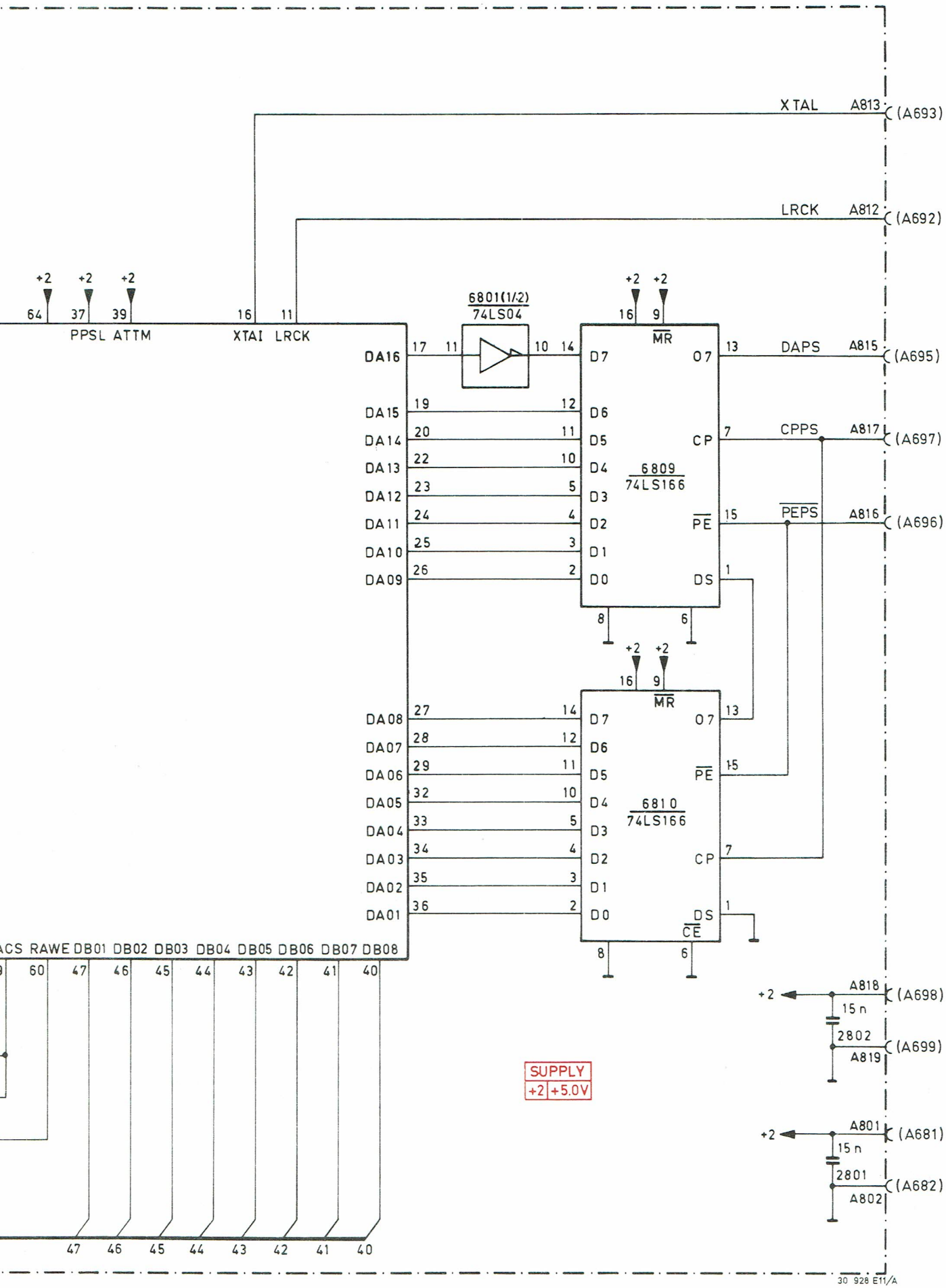
XTAL
A813
(A693)
LRCK
A812
(A692)
+2
64
37
39
PPSL
ATTM
16
11
XTAI
LRCK
6801(1/2)
74LS04
DA16
17
11
10
14
D7
MR
16
9
Q7
13
DAPS
A815
(A695)
DA15
19
12
D6
DA14
20
11
D5
CP
7
CPPS
A817
(A697)
DA13
22
10
D4
6809
74LS166
DA12
23
5
D3
DA11
24
4
D2
PE
15
PEPS
A816
(A696)
DA10
25
3
D1
DA09
26
2
D0
DS
1
8
6
DA08
27
14
D7
Q7
13
DA07
28
12
D6
DA06
29
11
D5
PE
15
DA05
32
10
D4
6810
74LS166
DA04
33
5
D3
DA03
34
4
D2
CP
7
DA02
35
3
D1
DA01
36
2
D0
DS
CE
1
8
6
ACS RAWE DB01 DB02 DB03 DB04 DB05 DB06 DB07 DB08
60
47
46
45
44
43
42
41
40
+2
A818
(A698)
15 n
2802
(A699)
A819
SUPPLY
+2 +5.0V
+2
A801
(A681)
15 n
2801
(A682)
A802
30 928 E11/A

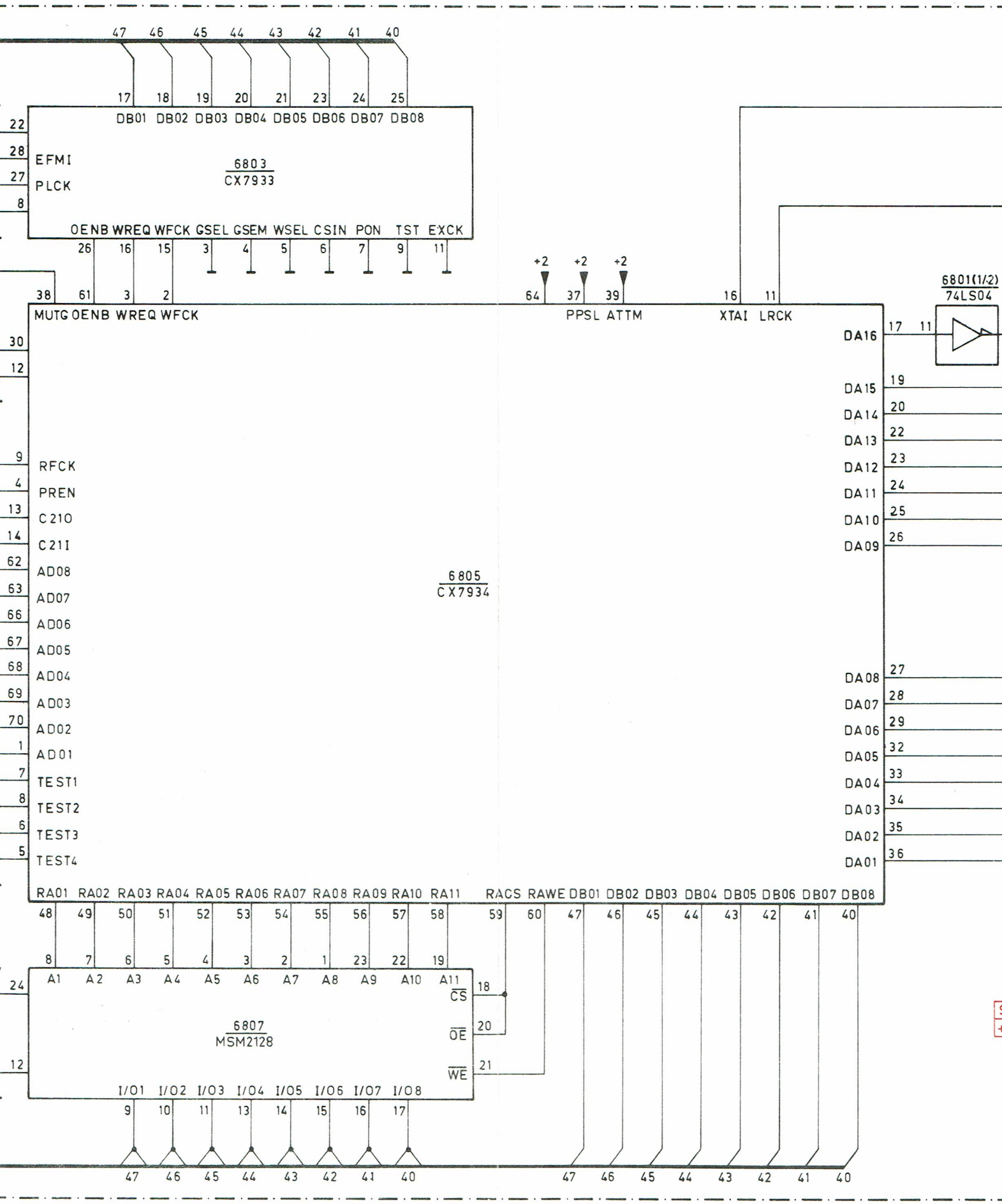
6803
CX7933
EFMI
PLCK
DB01 DB02 DB03 DB04 DB05 DB06 DB07 DB08
OENB WREQ WFCK GSEL GSEM WSEL CSIN PON TST EXCK
6805
CX7934
MUTG OENB WREQ WFCK
PPSL ATTM
XTAI LRCK
RFCK
PREN
C210
C21I
AD08
AD07
AD06
AD05
AD04
AD03
AD02
AD01
TEST1
TEST2
TEST3
TEST4
DA16
DA15
DA14
DA13
DA12
DA11
DA10
DA09
DA08
DA07
DA06
DA05
DA04
DA03
DA02
DA01
RA01 RA02 RA03 RA04 RA05 RA06 RA07 RA08 RA09 RA10 RA11
RACS RAWE DB01 DB02 DB03 DB04 DB05 DB06 DB07 DB08
6807
MSM2128
A1 A2 A3 A4 A5 A6 A7 A8 A9 A10 A11
CS
OE
WE
I/01 I/02 I/03 I/04 I/05 I/06 I/07 I/08
6801(1/2)
74LS04
+2

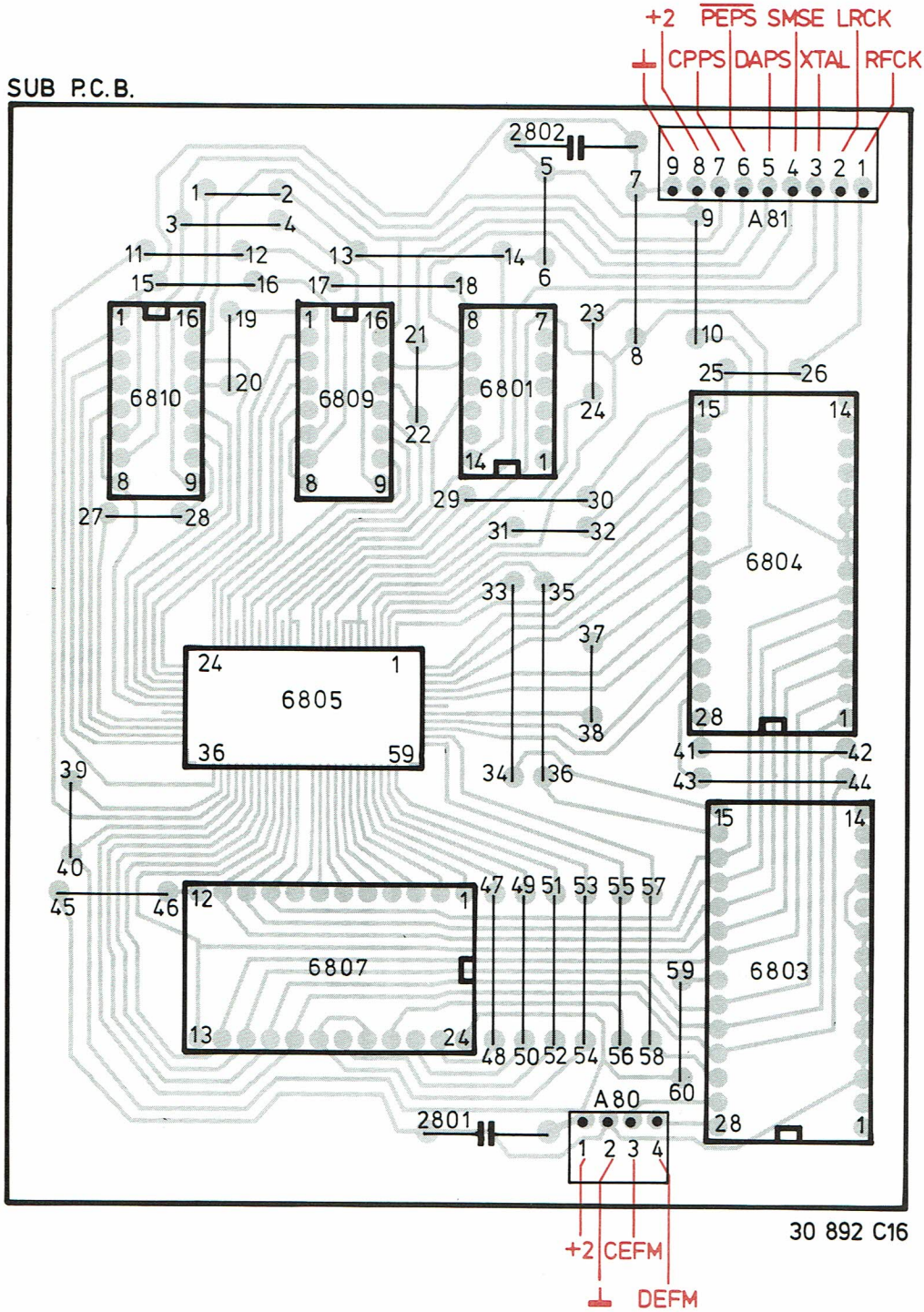
SUB P.C.B.
+2
PEPS
SMSE
LRCK
CPPS
DAPS
XTAL
RFCK
A81
2802
6810
6809
6801
6804
6805
6807
6803
2801
A80
+2
CEFM
DEFM
30 892 C16

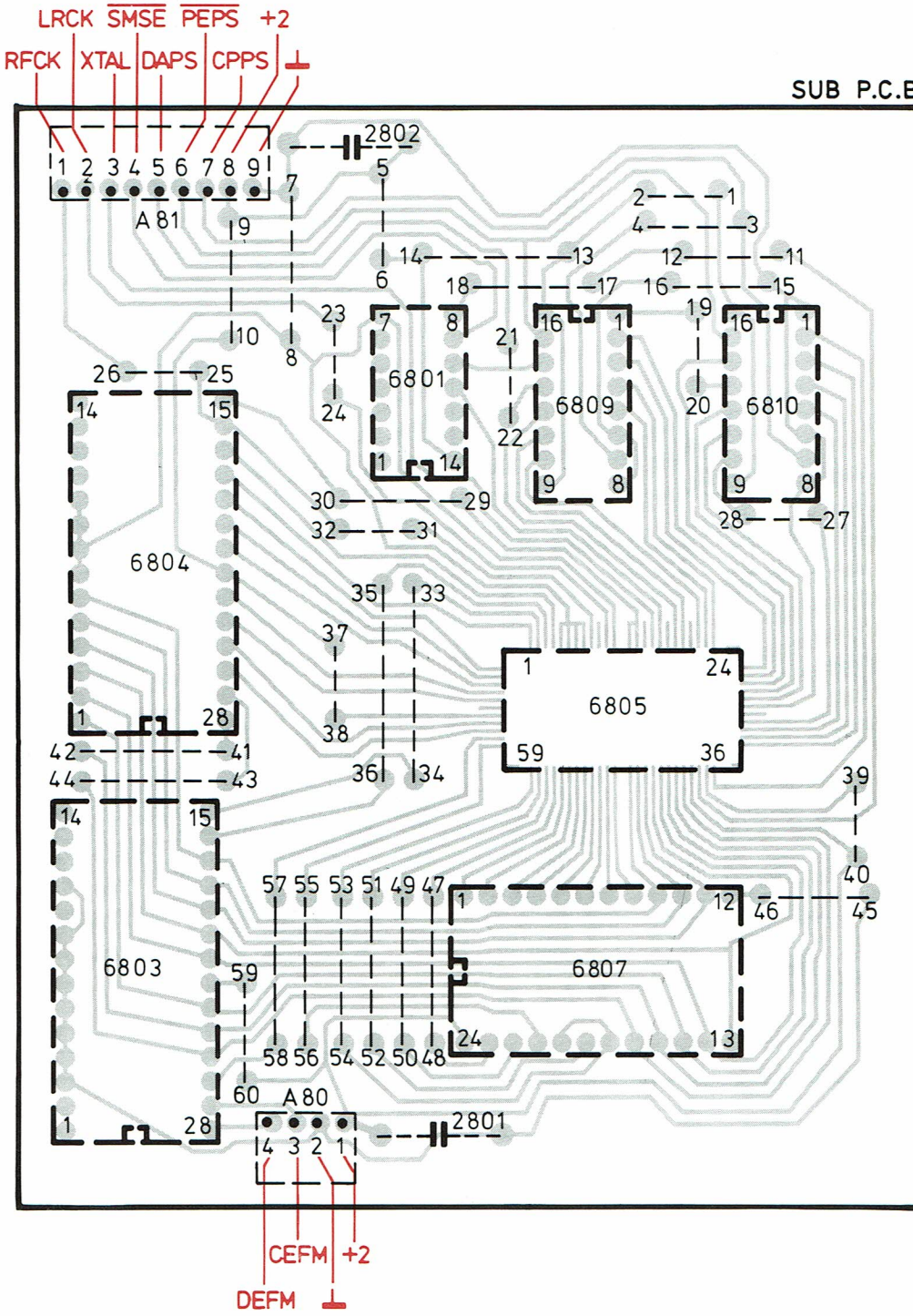

CX7933		4822 209 81497
CX7935		4822 209 81499
MSM2128		4822 209 10379
N74LS04N		4822 209 80783
SN74LS166N		5322 209 86292
Print with CX7934 (6805)		4822 214 50296
2801,2802	15n - 30%	4822 122 31471

"Drawer"

BC547B		4822 130 40959
BC557B		4822 130 44568
BD135		4822 130 40823
BA317		4822 130 30847
BZX78/C8V2		5322 130 34577
BZX79/C5V6		4822 130 34173
MV64521		4822 130 32014
3107	82E	4822 113 90103
3127	220k - VR25	5322 116 64114
2110	1 pF - 50 V Bipol.	4822 124 40678
1101	220 V/240 V version 200 mA.T	4822 253 30012
	110V/127V version 400 mA.T	4822 253 30016
1102	2x 25 mH	4822 157 51576
1103,1104	47 μH	4822 157 51462
SK1		4822 276 11083
SK2		4822 277 20851
SK3		4822 276 11082

"LED"

MV64521	4822 130 32014

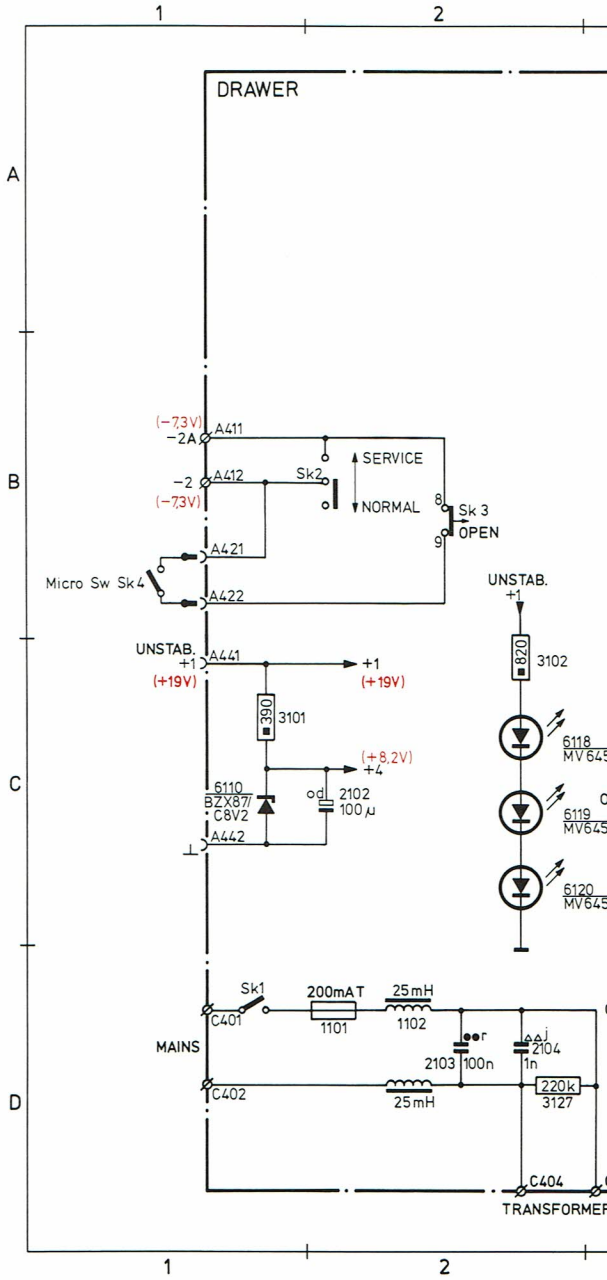

ITEM	CD
1101	D02
1102	D02
1103	A06
1104	A05
2102	C02
2103	D02
2104	D02
2105	C06
2106	B03
2107	B05
2108	B04
2109	D04
2110	A06
2111	D03
3101	C01
3102	C02
3103	D03
3104	B06
3105	B06
3106	C06
3107	B06
3108	C06
3109	C06
3110	B05
3111	B03
3112	B05
3113	C06
3114	C07
3115	B03
3116	B05
3117	C07
3118	C07
3119	B04
3120	C04
3121	C04
3122	C04
3123	C04
3124	C04
3125	C03
3126	D03
3127	D02
6101	B06
6102	B05
6103	C06
6104	C07
6105	B04
6106	B04
6107	D04
6108	C04
6109	D03
6110	C01
6111	C06
6112	C06
6113	B05
6114	B03
6115	B05
6116	C04
6117	C03
6118	C02
6119	C02
6120	C02

ITEM	CD
3101	A07
6101	B07
6102	B07
6103	B07

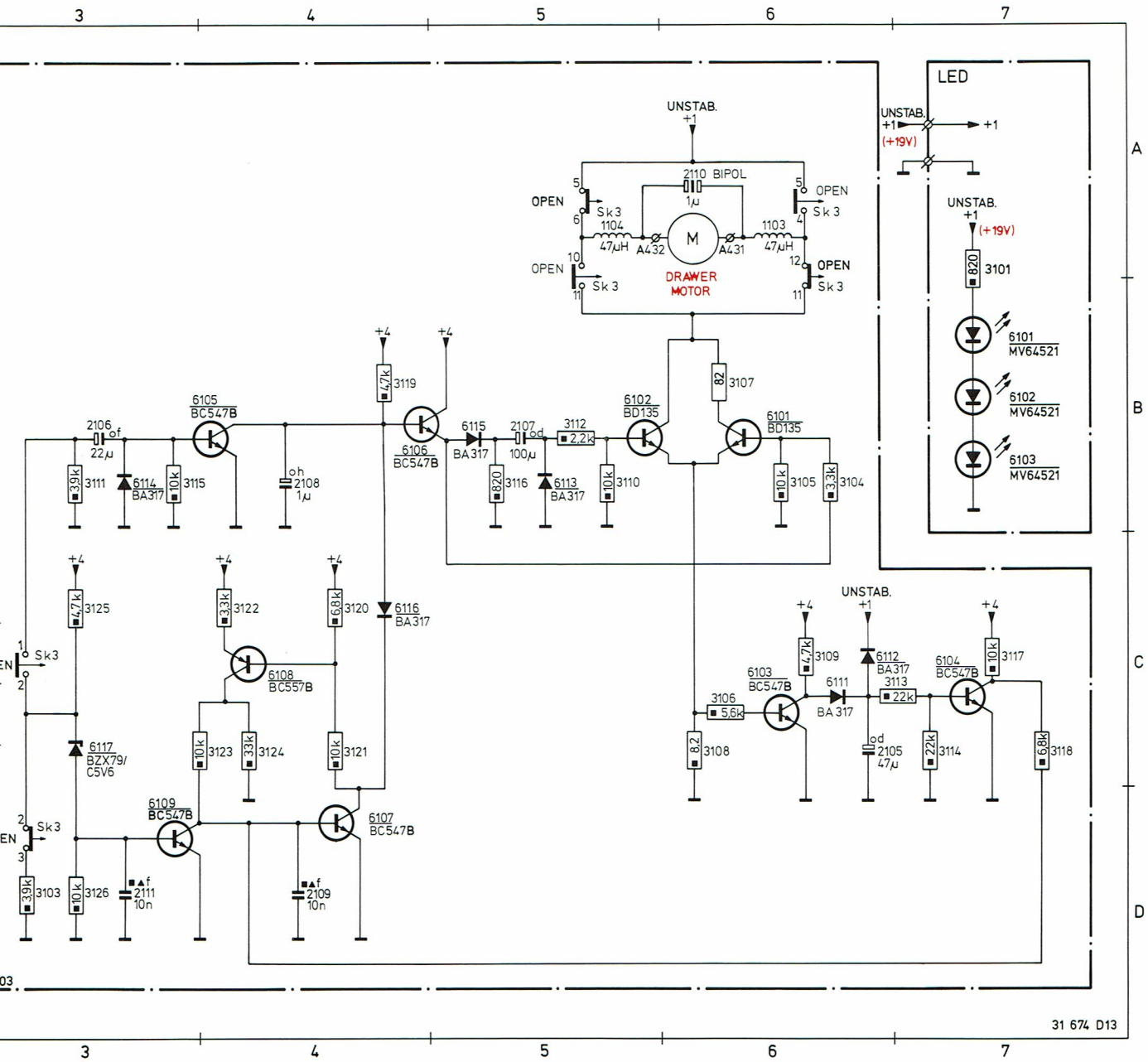
LED
UNSTAB.
+1
(+19V)
2110 BIPOL
1µ
OPEN
Sk3
1104
47µH
1103
47µH
A432
A431
M
DRAWER
MOTOR
3101
820
6101
MV64521
6102
MV64521
6103
MV64521
6105
BC547B
6106
BC547B
6115
BA317
2106
22µ
3111
3,9k
6114
BA317
3115
10k
2108
1µ
4,7k
3119
2107
100µ
3112
2,2k
6102
BD135
82
3107
6101
BD135
820
3116
6113
BA317
10k
3110
10k
3105
3,3k
3104
3125
3122
3,3k
6108
BC557B
6120
6,8k
6116
BA317
6117
BZX79/
C5V6
10k
3123
33k
3124
10k
3121
6109
BC547B
6107
BC547B
3103
3,9k
3126
10k
2111
10n
2109
10n
6103
BC547B
3109
4,7k
6112
BA317
3113
22k
6104
BC547B
3117
10k
3106
5,6k
6111
BA 317
3108
8,2
2105
47µ
3114
22k
3118
6,8k
31 674 D13

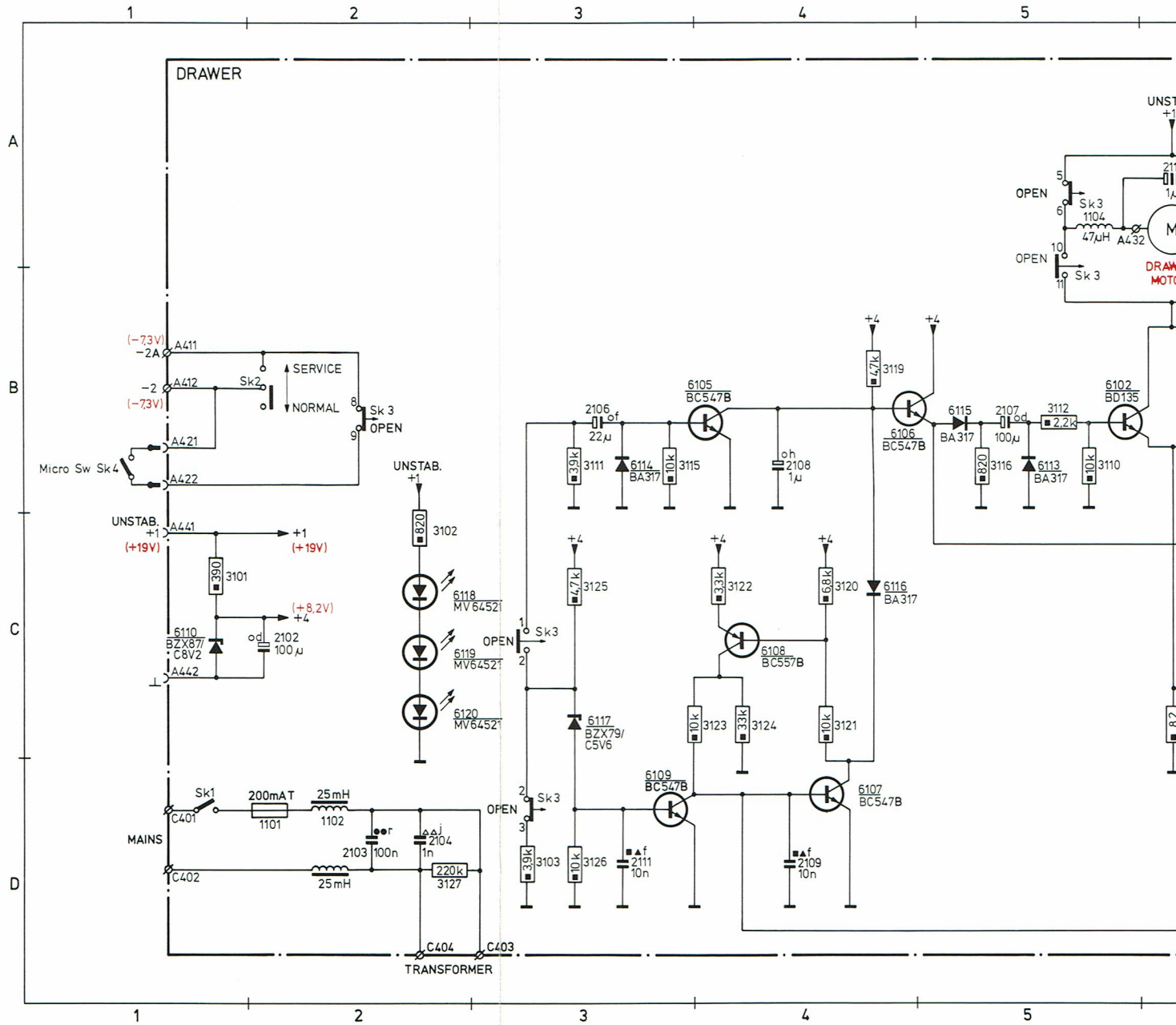

ITEM	CD
1101	D02
1102	D02
1103	A06
1104	A05
2102	C02
2103	D02
2104	D02
2105	C06
2106	B03
2107	B05
2108	B04
2109	D04
2110	A06
2111	D03
3101	C01
3102	C02
3103	D03
3104	B06
3105	B06
3106	C06
3107	B06
3108	C06
3109	C06
3110	B05
3111	B03
3112	B05
3113	C06
3114	C07
3115	B03
3116	B05
3117	C07
3118	C07
3119	B04
3120	C04
3121	C04
3122	C04
3123	C04
3124	C04
3125	C03
3126	D03
3127	D02
6101	B06
6102	B05
6103	C06
6104	C07
6105	B04
6106	B04
6107	D04
6108	C04
6109	D03
6110	C01
6111	C06
6112	C06
6113	B05
6114	B03
6115	B05
6116	C04
6117	C03
6118	C02
6119	C02
6120	C02

ITEM	CD
3101	A07
6101	B07
6102	B07
6103	B07

4822 263 70175

INTER-CONNECTION P.C.B. 1

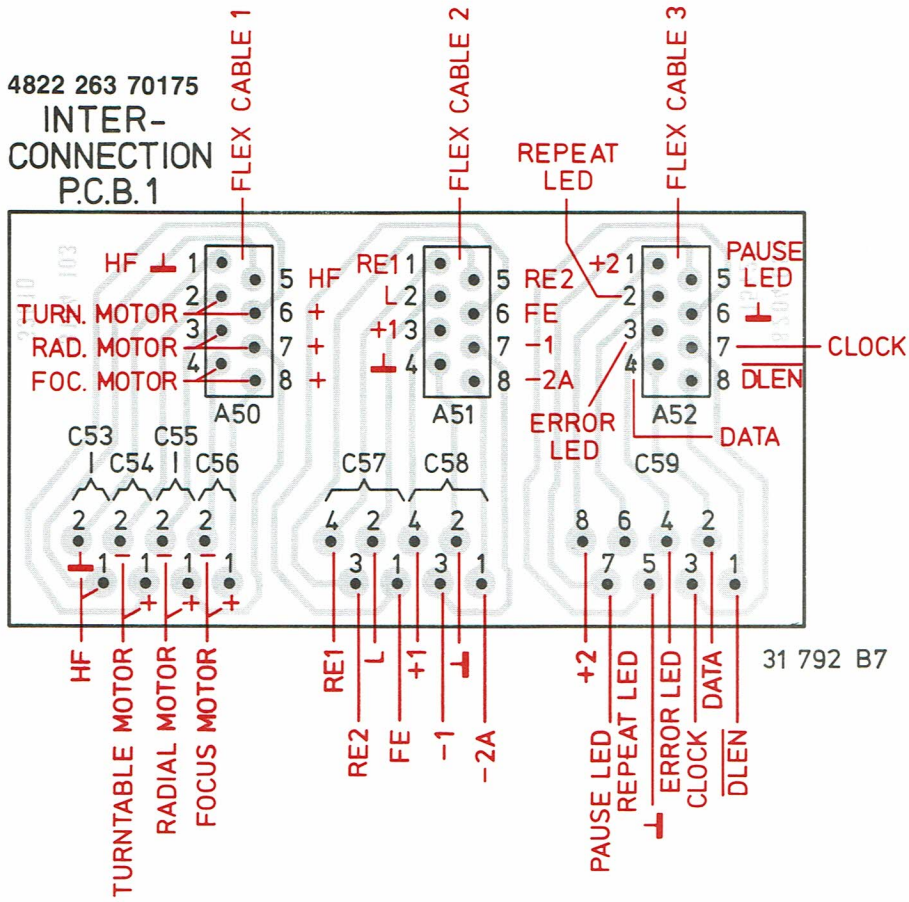

31 792 B7

4822 263 70177

INTERCONNECTION P.C.B. 2

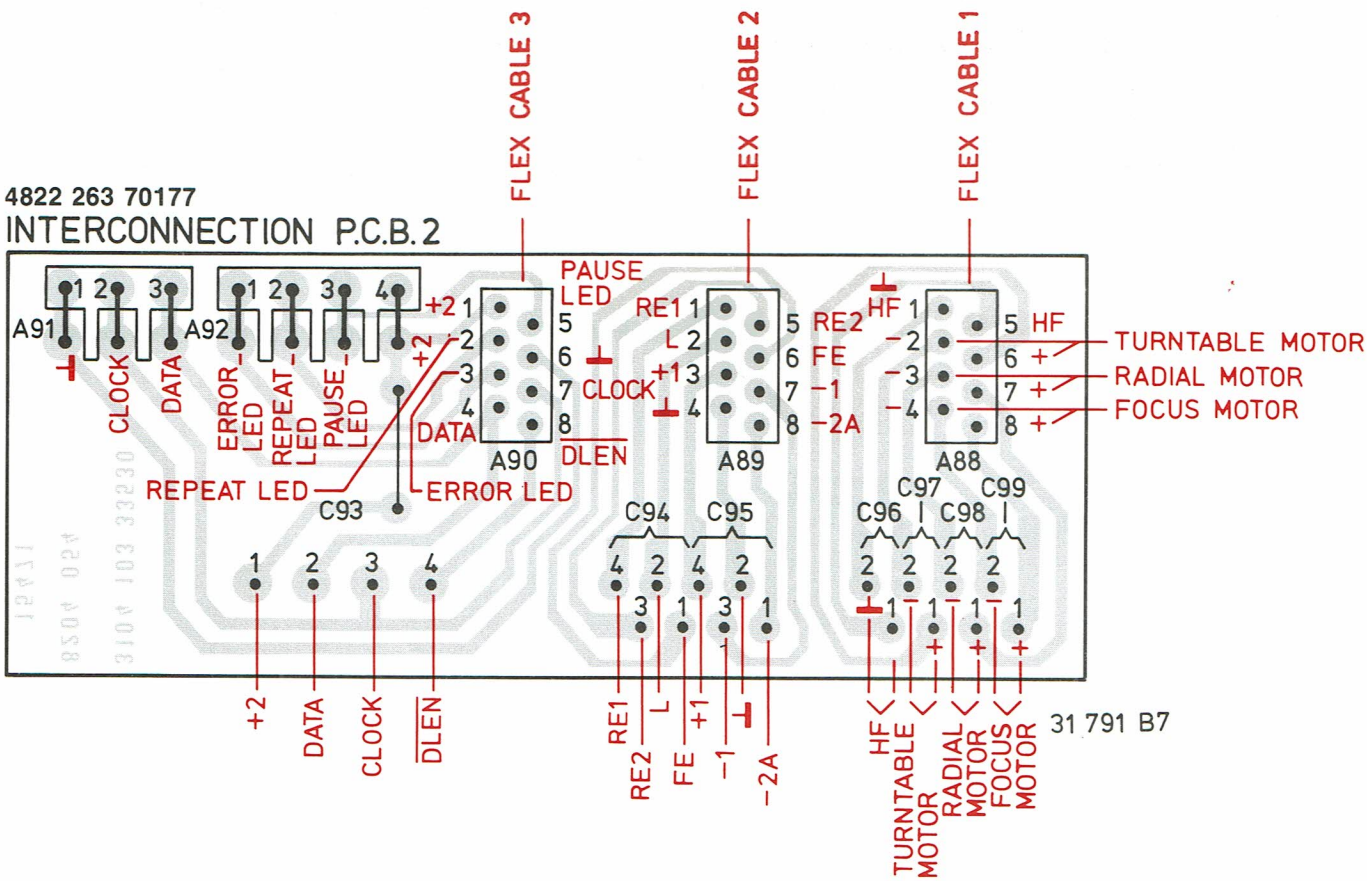

31 791 B7

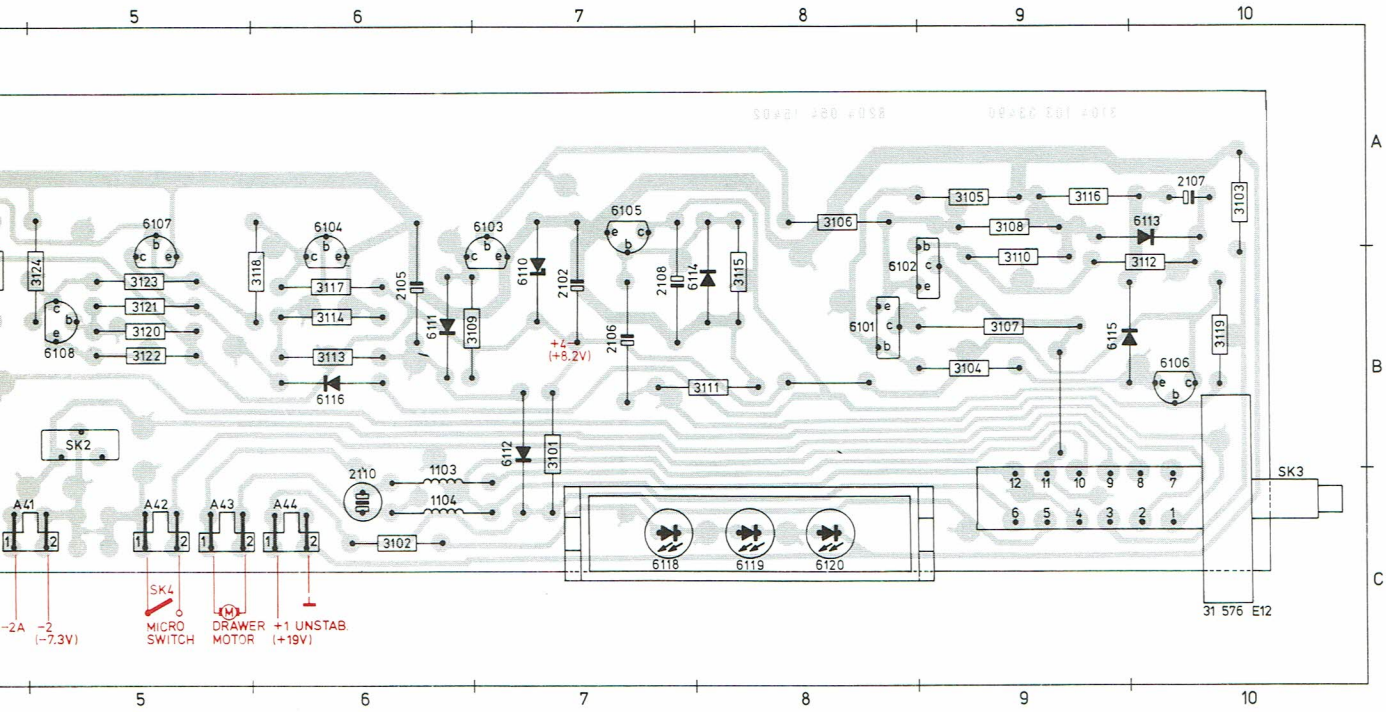
5
6
7
8
9
10
A
B
C
6107
6108
6104
6103
6105
6102
6101
6113
6115
6106
6116
6111
6110
6112
6114
2107
2105
2102
2108
2106
2110
3124
3123
3121
3120
3122
3118
3117
3114
3113
3109
3101
3102
3103
3104
3105
3106
3107
3108
3110
3111
3112
3115
3116
3119
1103
1104
+4
(+8.2V)
SK2
SK3
SK4
A41
A42
A43
A44
6118
6119
6120
-2A
-2
(-7.3V)
MICRO
SWITCH
DRAWER
MOTOR
+1 UNSTAB.
(+19V)
31 576 E12

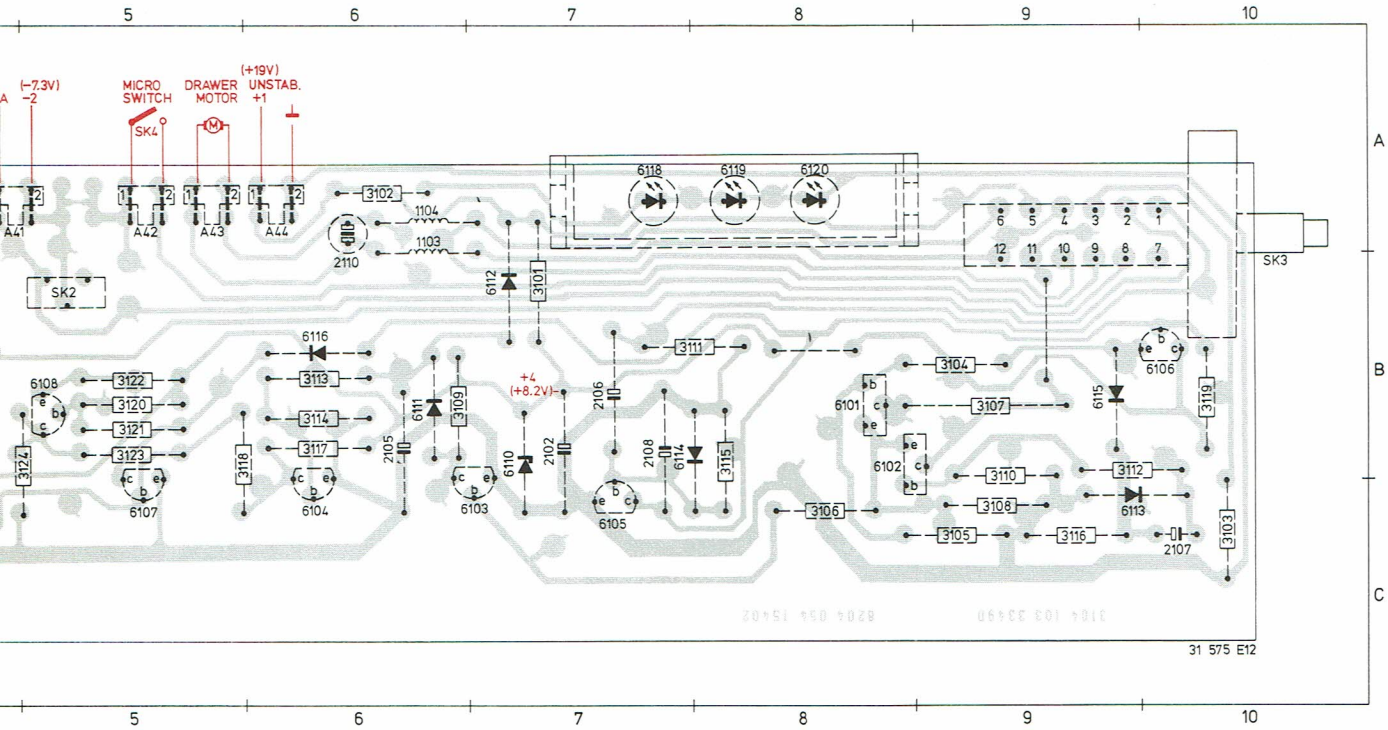
5
6
7
8
9
10
A
B
C
(-7.3V)
-2
MICRO
SWITCH
DRAWER
MOTOR
(+19V)
UNSTAB.
+1
SK4
A41
A42
A43
A44
SK2
SK3
3102
1104
1103
2110
6118
6119
6120
6112
3101
6116
3113
3114
3117
6108
3122
3120
3121
3123
3124
6107
6104
3118
2105
6111
3109
6103
+4
(+8.2V)
6110
2102
2106
6105
2108
6114
3115
3111
3106
6101
6102
3104
3107
3110
3108
3105
3116
6115
6106
3119
3112
6113
2107
3103
31 575 E12

ITEM	PCB				
1101	B03	3112	B10	6105	A07
1102	B01	3113	B06	6106	B10
1103	C06	3114	B06	6107	A05
1104	C06	3115	B08	6108	B05
2102	B07	3116	A09	6109	B04
2103	B01	3117	B06	6110	B07
2104	B01	3118	B06	6111	B06
2105	B06	3119	B10	6112	B07
2106	B07	3120	B05	6113	A10
2107	A10	3121	B05	6114	B07
2108	B07	3122	B05	6115	B03
2109	B04	3123	B05	6116	B06
2110	C06	3124	B05	6117	B04
2111	B04	3125	B04	6118	C07
3101	B07	3126	B04	6119	C08
3102	C06	3127	C02	6120	C08
3103	A10	6101	B08		
3104	B03	6102	B08		
3105	A09	6103	A07		
3106	A08	6104	A06		
3107	B03				
3108	A09				
3109	B06				
3110	B03				
3111	B08				

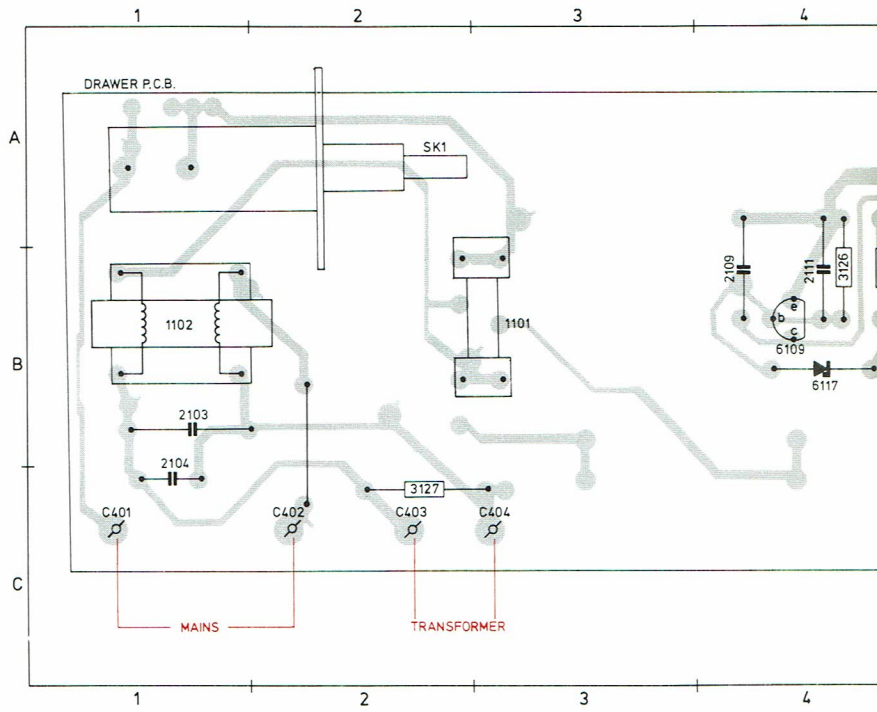

ITEM	PCB				
1101	B03	3112	B09	6105	C07
1102	B01	3113	B06	6106	B10
1103	A06	3114	B06	6107	C05
1104	A06	3115	B08	6108	B05
2102	B07	3116	C09	6109	B04
2103	B01	3117	B06	6110	B07
2104	B01	3118	B05	6111	B06
2105	B06	3119	B10	6112	B07
2106	B07	3120	B05	6113	C09
2107	C10	3121	B05	6114	B07
2108	B07	3122	B05	6115	B09
2109	B04	3123	B05	6116	B06
2110	B06	3124	B05	6117	B04
2111	B04	3125	B04	6118	A07
3101	B07	3126	B04	6119	A08
3102	A06	3127	A02	6120	A08
3103	C10	6101	B08		
3104	B09	6102	B08		
3105	C09	6103	C07		
3106	C08	6104	C06		
3107	B09				
3108	C09				
3109	B06				
3110	B09				
3111	B07				

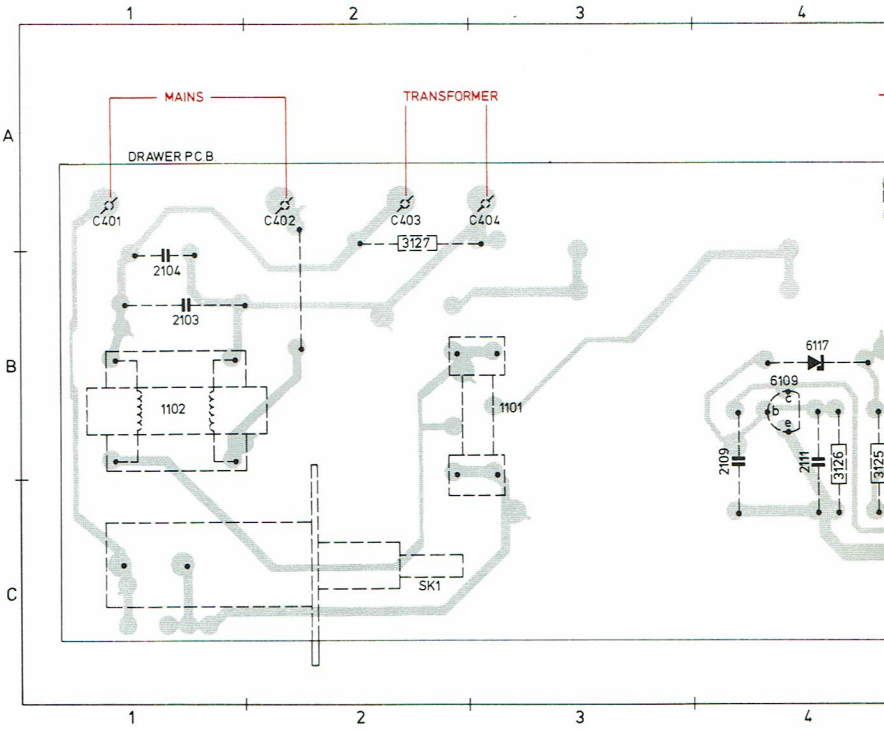

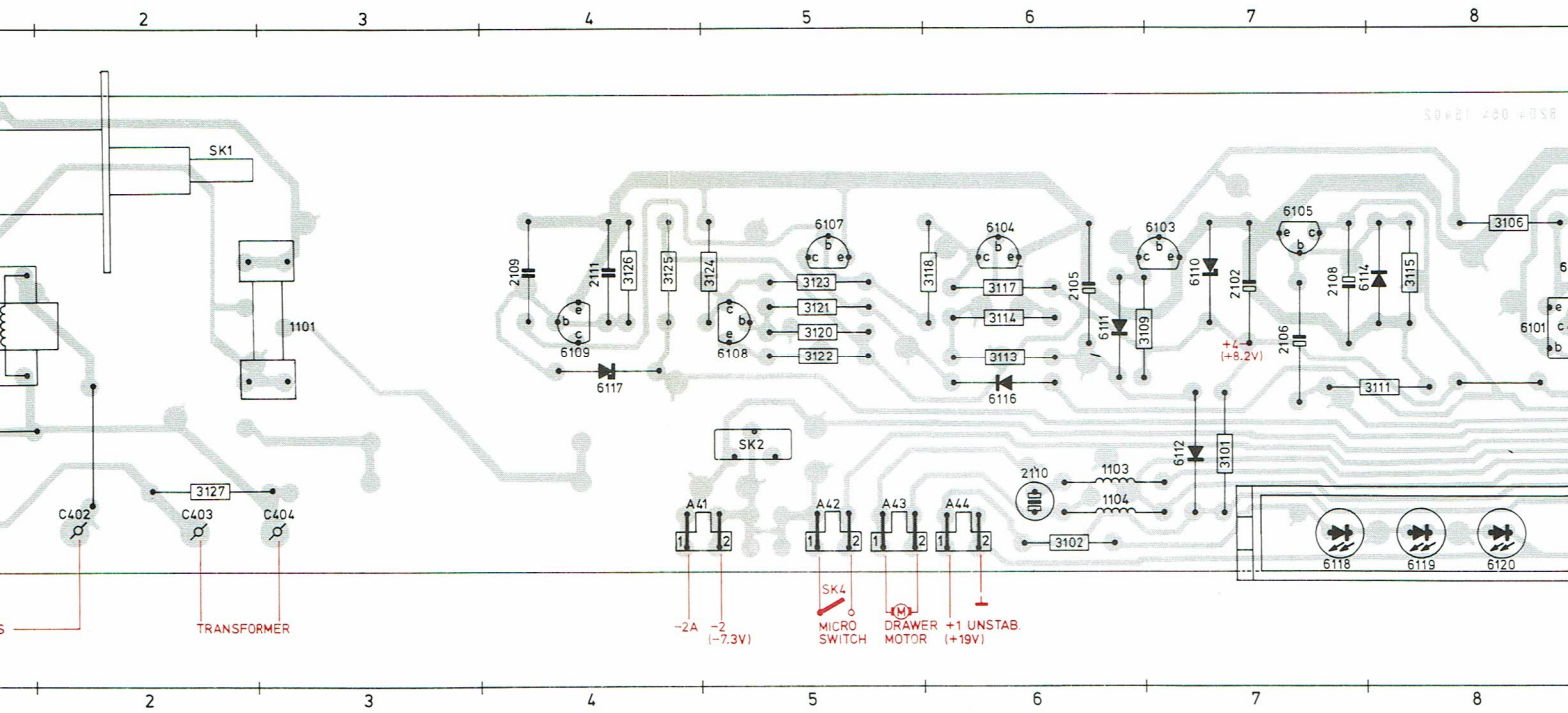
2
3
4
5
6
7
8
SK1
1101
C402
C403
C404
3127
TRANSFORMER
2109
2111
3126
3125
3124
6107
6109
6108
6117
3123
3121
3120
3122
3118
6104
3117
3114
3113
6116
2105
6111
3109
6103
6110
2102
+4
(+8.2V)
6105
2108
6114
3115
2106
3106
6101
3111
6112
3101
SK2
2110
1103
1104
3102
A41
A42
A43
A44
-2A
-2
(-7.3V)
SK4
MICRO
SWITCH
DRAWER
MOTOR
+1 UNSTAB.
(+19V)
6118
6119
6120

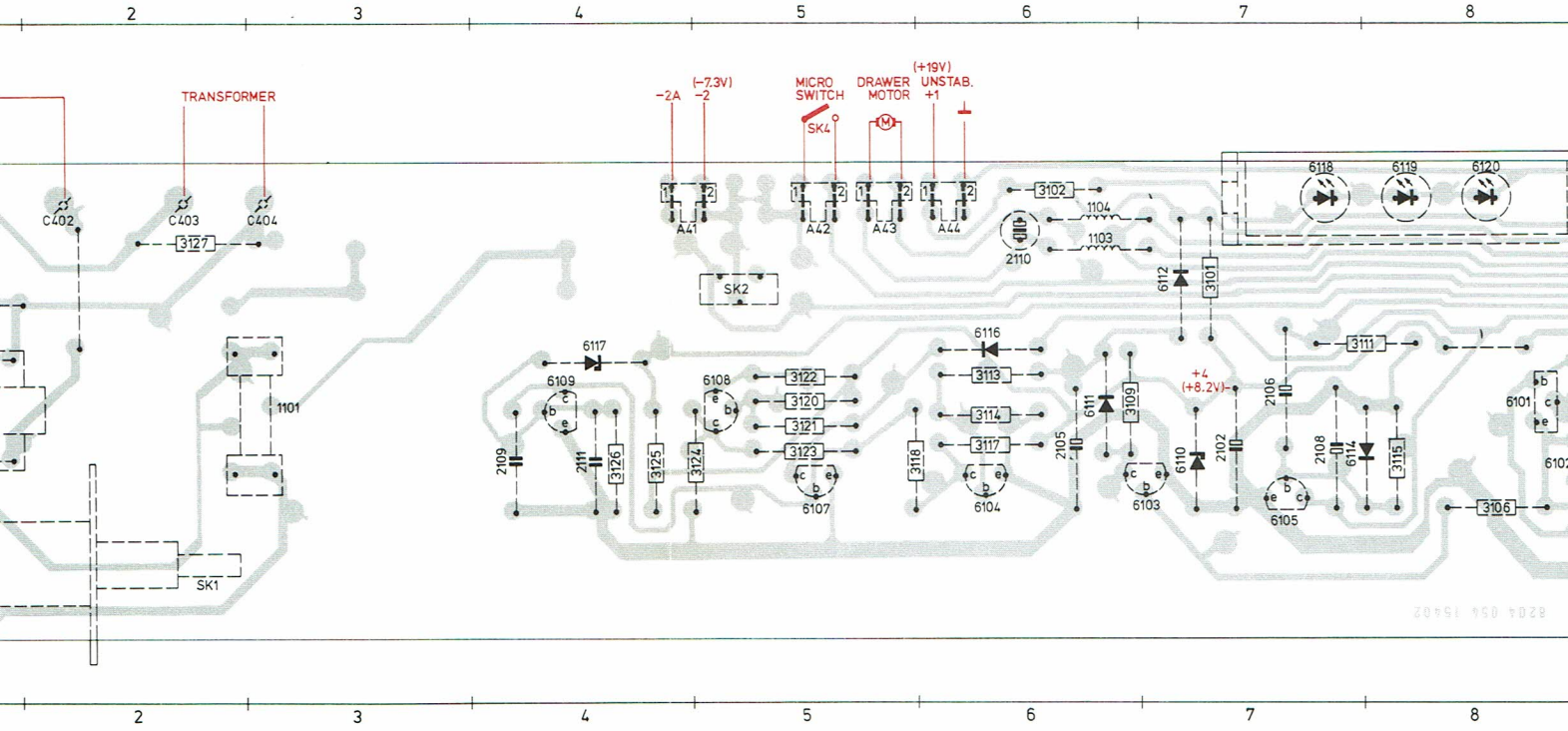
2
3
4
5
6
7
8
TRANSFORMER
C402
C403
C404
3127
1101
SK1
-2A
-2
(-7.3V)
MICRO
SWITCH
SK4
DRAWER
MOTOR
+1
(+19V)
UNSTAB.
A41
A42
A43
A44
3102
1104
1103
2110
6118
6119
6120
SK2
6112
3101
6117
6109
6108
3122
3120
3121
3123
6107
2109
2111
3126
3125
3124
3118
6116
3113
3114
3117
6104
2105
6111
3109
6103
6110
+4
(+8.2V)
2102
6105
2106
2108
6114
3115
3111
3106
6101

▲	0.2 W (CR16)	⩽ 220 kΩ > 270 kΩ	5% 10%
□	0.33 W (CR25)	⩽ 1 MΩ > 1 MΩ	5% 10%
■	0.33 W (SFR25)		5%
■	0.25 W (VR25)	⩽ 10 MΩ > 10 MΩ	5% 10%
●	0.5 W (CR37)	⩽ 1 MΩ > 1 MΩ	5% 10%
	0.67 W (CR52)		5%
	1.15 W (CR68)		5%

△△*	Ceramic plate
●●*	Polyester flat foil
□*	Polyester mepolesco
○□	Mylar (Polyester flat foil small sized)
○△*	Micropoco
■▲*	Tubular ceramic (body colour pink or yellow/green)
○*	Miniature single elco
○○*	Subminiature tantalum cap.

*a = 2,5 V
b = 4 V
c = 6,3 V
d = 10 V
e = 16 V
f = 25 V
g = 40 V
h = 63 V
j = 100 V
l = 125 V
m = 150 V
n = 160 V
q = 200 V
r = 250 V
s = 300 V
t = 350 V
u = 400 V
v = 500 V
w = 630 V
x = 1000 V
A = 1,6 V
B = 6 V
C = 12 V
D = 15 V
E = 20 V
F = 35 V
G = 50 V
H = 75 V
I = 80 V

27037A/B

COMPACT disc DIGITAL AUDIO

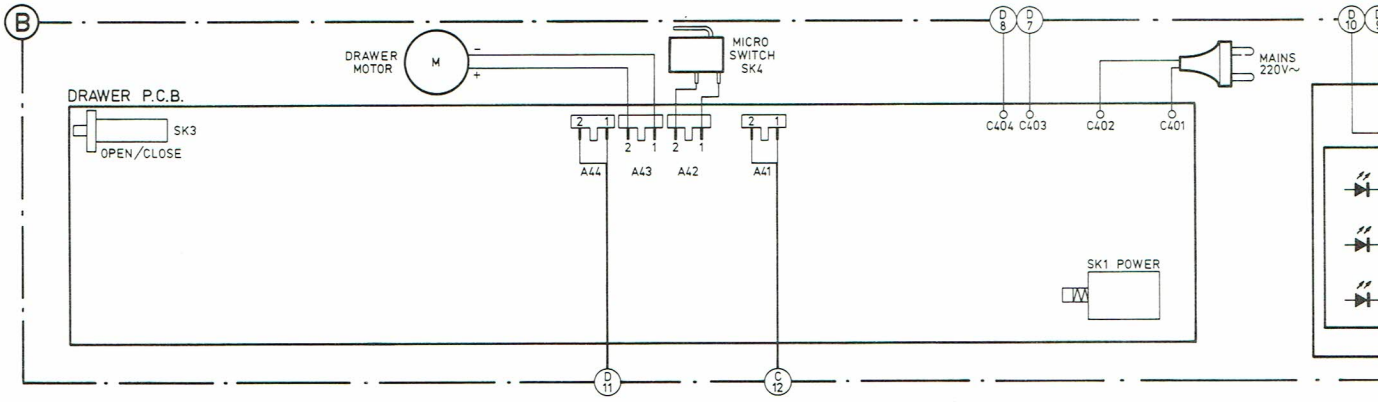

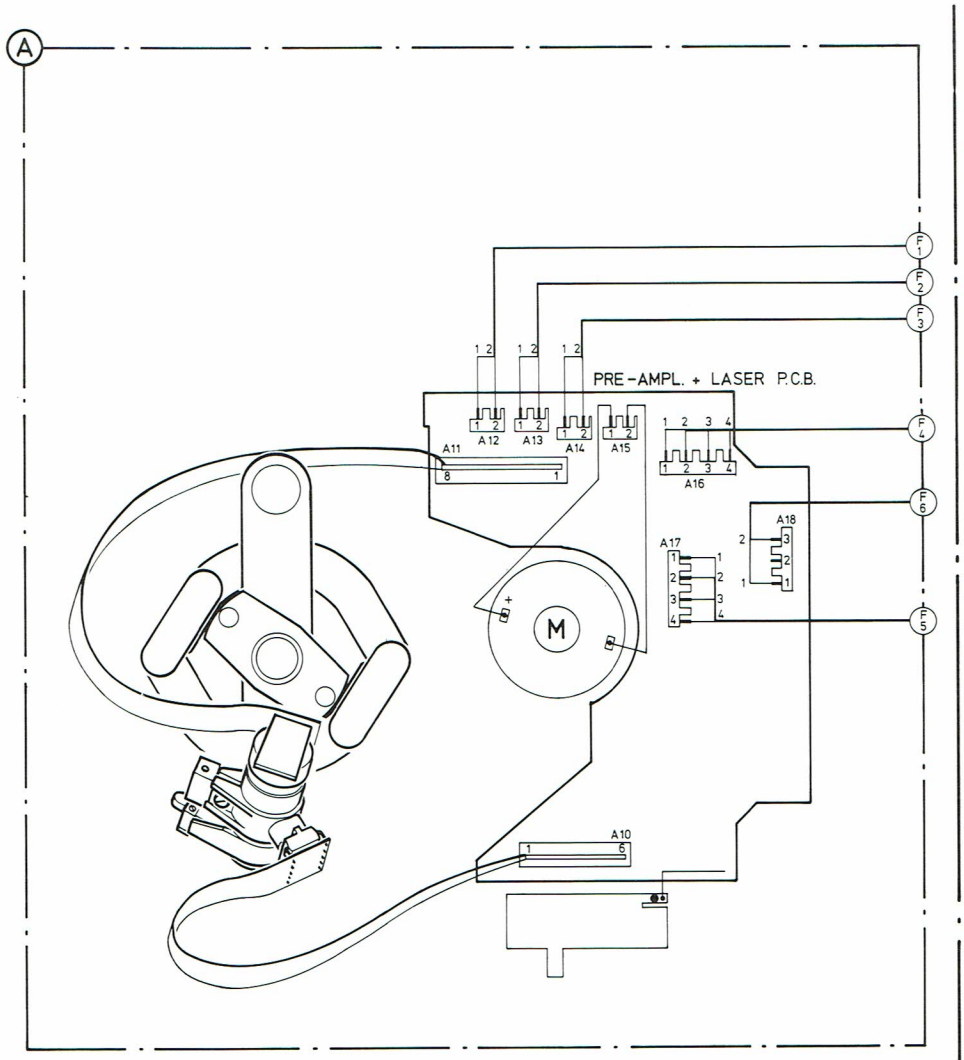

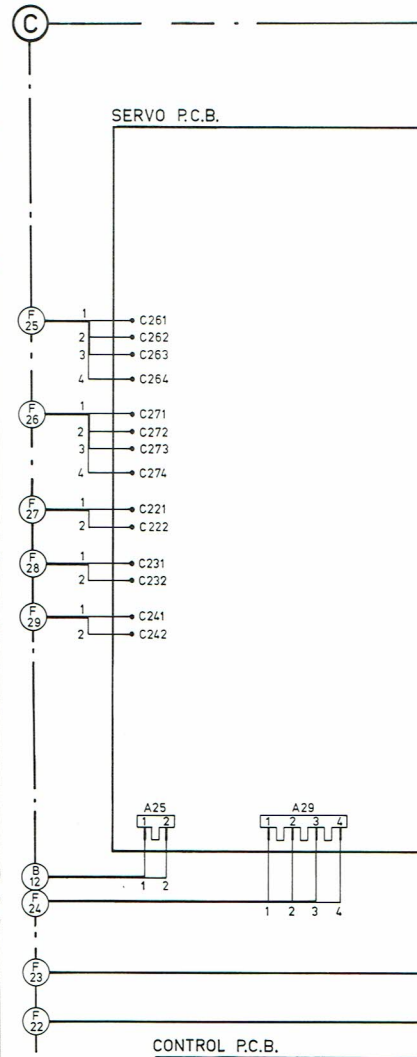

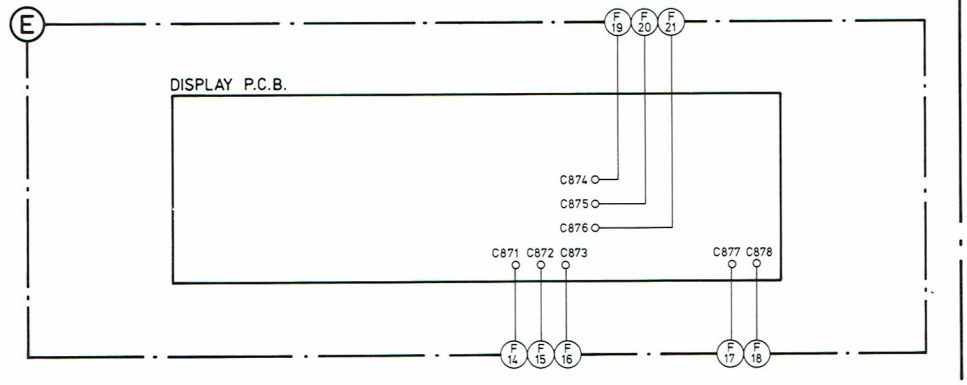

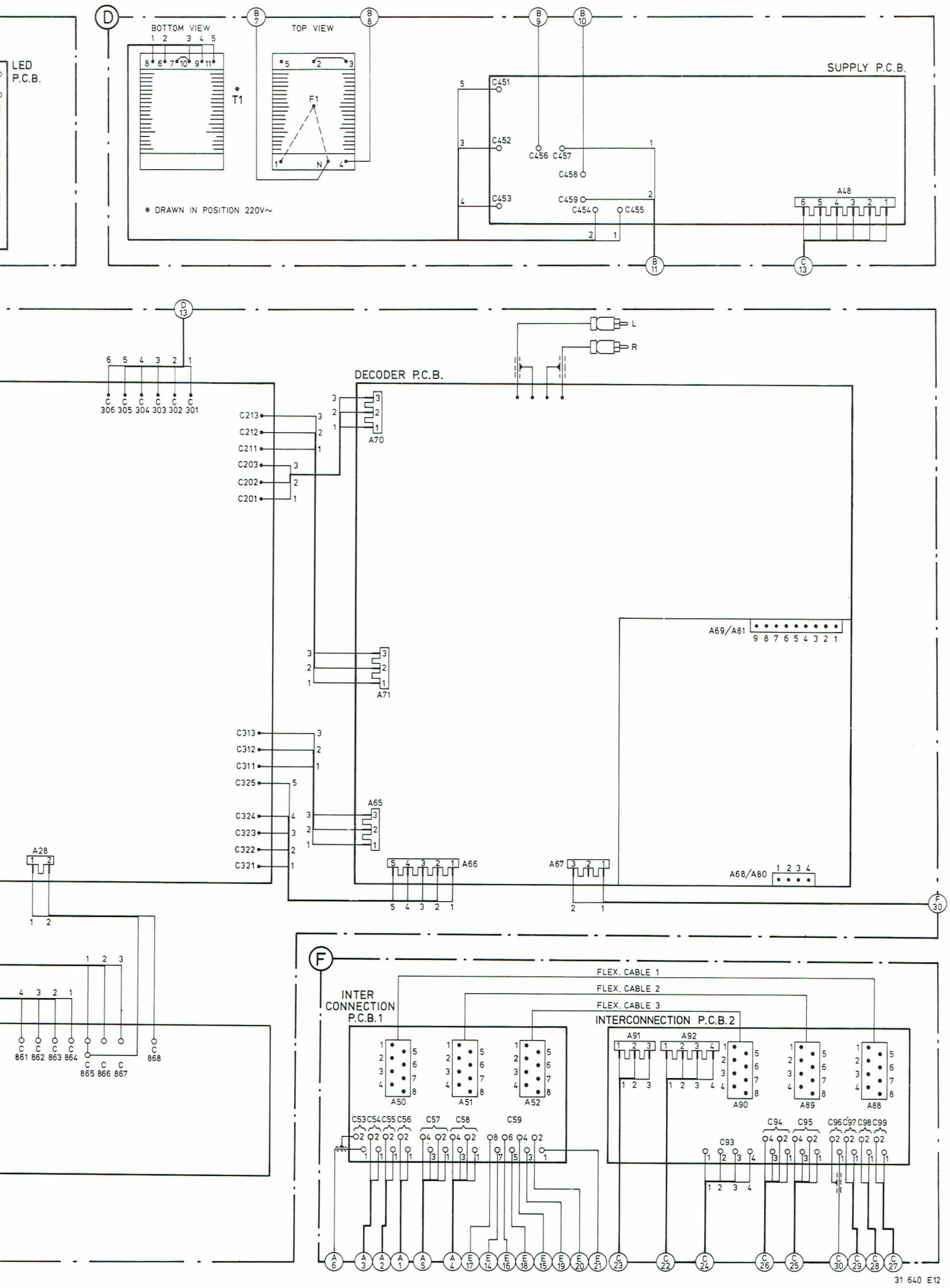
LED P.C.B.
D
BOTTOM VIEW
TOP VIEW
T1
F1
N
* DRAWN IN POSITION 220V~
SUPPLY P.C.B.
C451
C452
C453
C456 C457
C458
C459
C454
C455
A48
DECODER P.C.B.
L
R
C306 C305 C304 C303 C302 C301
C213
C212
C211
C203
C202
C201
A70
A71
C313
C312
C311
C325
C324
C323
C322
C321
A65
A66
A67
A69/A81
A68/A80
A28
C861 C862 C863 C864
C865 C866 C867
C868
F
INTER CONNECTION P.C.B.1
FLEX. CABLE 1
FLEX. CABLE 2
FLEX. CABLE 3
INTERCONNECTION P.C.B.2
A91
A92
A50
A51
A52
A90
A89
A88
C53 C54 C55 C56
C57
C58
C59
C93
C94
C95
C96 C97 C98 C99
31 640 E12

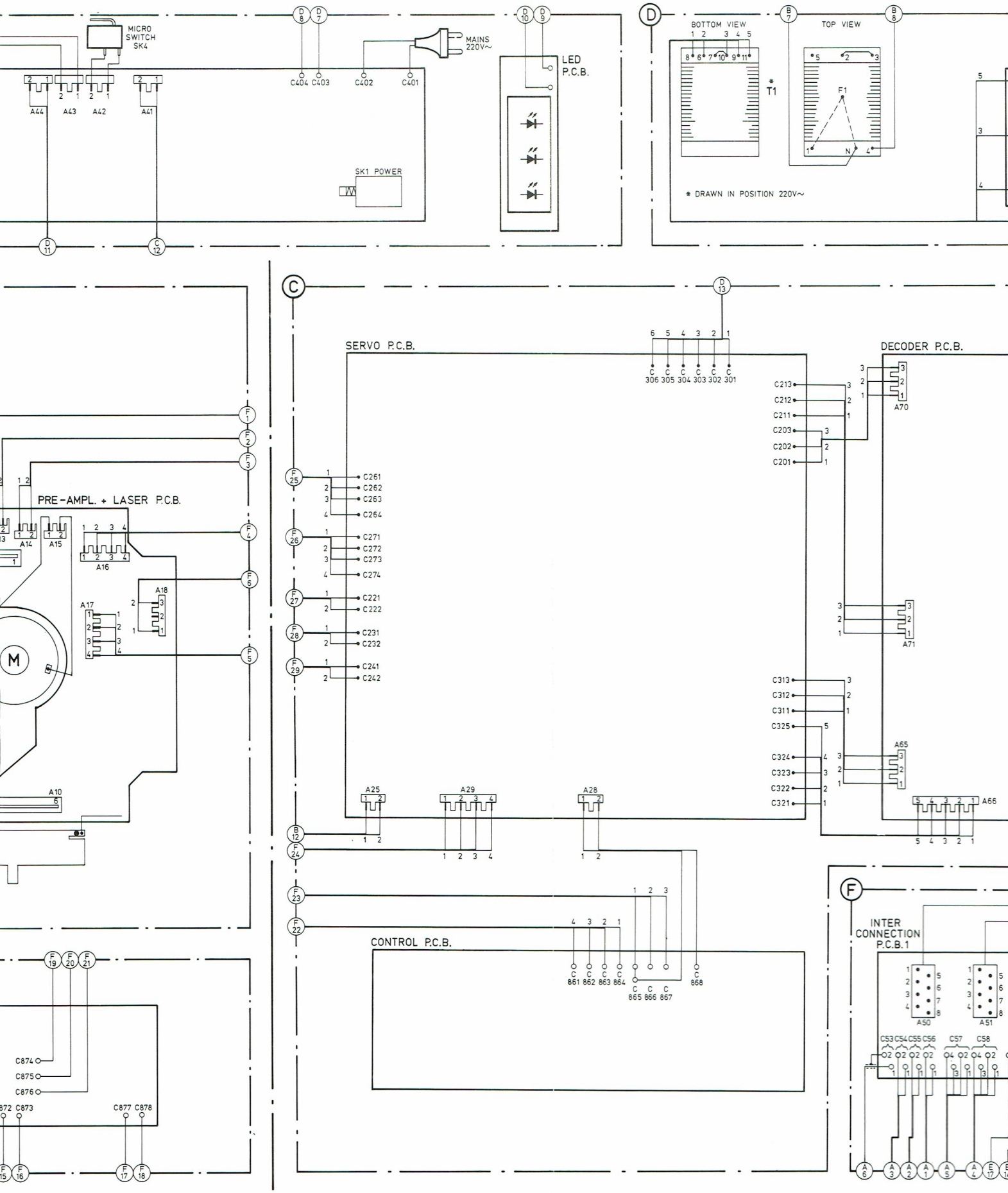
MICRO SWITCH SK4
MAINS 220V~
LED P.C.B.
SK1 POWER
C404 C403 C402 C401
A44 A43 A42 A41
BOTTOM VIEW
TOP VIEW
T1
F1
* DRAWN IN POSITION 220V~
PRE-AMPL. + LASER P.C.B.
A14 A15 A16 A17 A18 A10
SERVO P.C.B.
DECODER P.C.B.
A70 A71 A65 A66
C306 C305 C304 C303 C302 C301
C261 C262 C263 C264
C271 C272 C273 C274
C221 C222
C231 C232
C241 C242
C213 C212 C211 C203 C202 C201
C313 C312 C311 C325 C324 C323 C322 C321
A25 A29 A28
CONTROL P.C.B.
C861 C862 C863 C864 C865 C866 C867 C868
INTER CONNECTION P.C.B.1
A50 A51
C53 C54 C55 C56 C57 C58
C874 C875 C876
C872 C873 C877 C878

11. MODIFICATIONS

Introduit par l'info A83-126 du 1983-04-28

Description		Raisons
Table des matières	1-1-a	Adapté
Auxiliaires Service	5-2-a	Simulateur laser POS. VOLT. SH. ajouté
Réglages et mesures	6-5	Vérification et ajustage POS. VOLT. SH. ajouté